Hoval

Indoor Climate Systems

Hoval TopVent®

TH | TC | THC | MH | MC | MHC

Design handbook

Recirculation units and supply air units with efficient air distribution for heating and cooling with central heat and cold generation

Hoval | Responsibility for energy and environment

Hoval Indoor Climate Systems 3

Efficient. Flexible. Reliable.

TopVent® TH 7

Recirculation units for heating spaces up to 25 m in height with central heat supply

TopVent® TC 21

Recirculation units for heating and cooling spaces up to 25 m in height with central heat and cold supply (2-pipe-system)

TopVent® THC 37

Recirculation units for heating and cooling spaces up to 25 m in height with central heat and cold supply (4-pipe-system)

TopVent® MH 55

Supply air units for ventilating and heating spaces up to 25 m in height with central heat supply

TopVent® MC 73

Supply air units for ventilating, heating and cooling spaces up to 25 m in height with central heat and cold supply (2-pipe-system)

TopVent® MHC 91

Supply air units for ventilating, heating and cooling spaces up to 25 m in height with central heat and cold supply (4-pipe-system)

Options 109

Transport and installation 123

System design 137

Control systems

Hoval TopTronic® C
→ see “Control Systems for Hoval Indoor Climate Systems” manual

Hoval Indoor Climate Systems

Efficient. Flexible. Reliable.

Efficient. Flexible. Reliable.

Hoval indoor climate systems are decentralised systems for heating, cooling and ventilating halls for industrial, commercial and leisure applications. The systems have a modular structure. One system comprises several ventilation units which are spread around the room. These units are equipped with reversible heat pumps for decentralised heat and cold generation, or they heat and cool with a connection to a central energy supply.
Tailored control systems complete the system and ensure the effective combination and optimal use of all resources.

Diverse range of units ensures flexibility
Different types of ventilation units can be combined to create the perfect system for the project in question:

- RoofVent® supply and extract air handling units
- TopVent® supply air units
- TopVent® recirculation units

The number of supply and extract air handling units depends on how much fresh air is required in order to create a comfortable atmosphere for people in the building. Recirculation units cover additional heat or cool demand as required. A broad range of unit types and sizes with heating and cooling coils in various output levels means that the overall output of the system can be scaled to whatever level is required.
Specially designed unit versions are also available for halls with particularly humid or oily extract air.
Furthermore, there is a range of units available which have been expressly developed for very specific purposes. ProcessVent units, for example, are coupled with extract air purification systems in industrial halls and recover heat from process air.

Draught-free air distribution
A key feature of Hoval indoor climate units is the patented vortex air distributor, known as the Air-Injector. It is controlled automatically and changes the blowing angle of the air continuously between vertical and horizontal. The highly efficient air supply system has many advantages:

- It provides a high level of comfort during heating and cooling. No draughts develop in the hall.
- The efficient and even air distribution ensures that the indoor climate units cover a large area.
- The Air-Injector keeps the temperature stratification in the room low, thus minimising heat loss through the roof.

Control with specialist expertise
The TopTronic® C control system, which was specifically developed for Hoval indoor climate systems, regulates the separate units individually and controls them based on zones. This enables optimal adjustment to the local requirements of the different usage areas in the building. The patented control algorithm optimises energy use and ensures maximum comfort and hygiene levels. Clear interfaces make it easy to connect the system to the building management system or to the HovalSupervisor cloud.
Simpler control systems are also available for units that are only used for supply air or air recirculation.

Competent and reliable
Hoval will support you and provide expert knowledge throughout all project phases. You can rely on comprehensive technical advice when it comes to planning Hoval indoor climate systems and on the skills of the Hoval technicians during the installation, commissioning and maintenance of the system.

A

System with decentralised heat and cold generation with heat pump

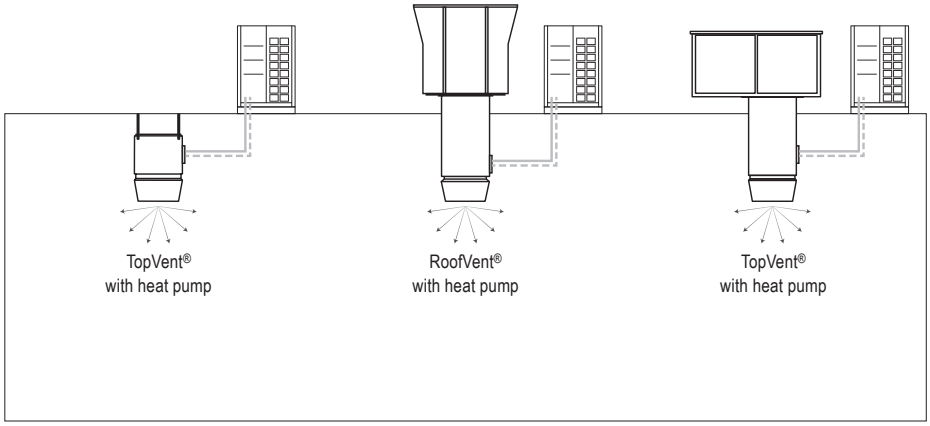

System with central heat and cold generation

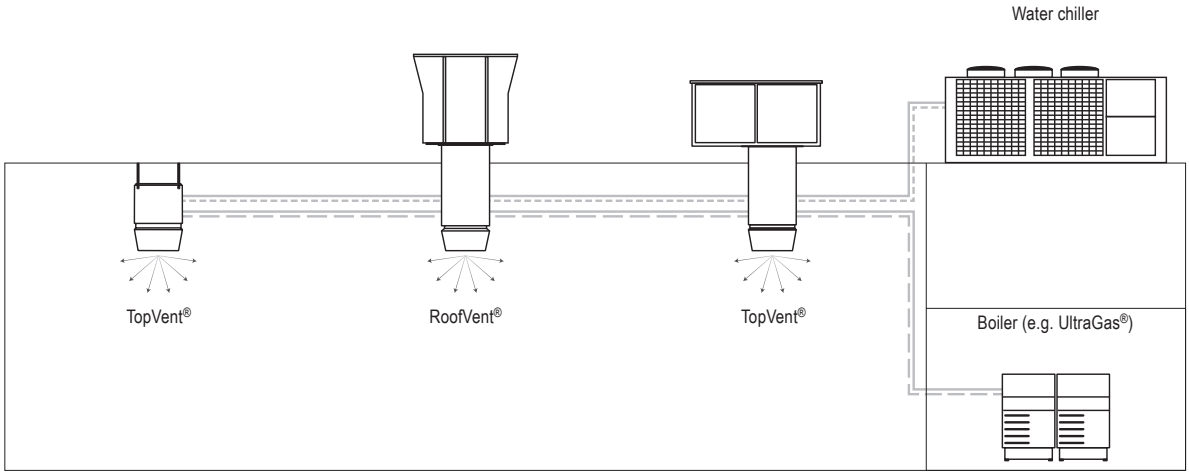

Hoval

B

TopVent® TH

Recirculation units for heating spaces up to 25 m in height with central heat supply

1 Use 8
2 Construction and operation 8
3 Technical data 11
4 Specification texts 15

1 Use

1.1 Intended use

TopVent® TH units are recirculation units for heating spaces up to 25 m in height with central heat supply. They have the following functions:

- Heating (with connection to a hot water supply)
- Recirculation operation
- Air distribution and destratification with adjustable Air-Injector
- Air filtration (option)

The TopVent® TH unit complies with all the requirements of the Ecodesign Regulation (EU) 2024/1781. It is a system of the “fan coil unit” type, provided for in Commission Regulation (EU) 2016/2281.

The Hoval TopTronic® C integrated control system ensures energy-efficient, demand-based operation of Hoval indoor climate systems.

Intended use also includes compliance with the operating instructions. Any usage over and above this use is considered to be not as intended. The manufacturer can accept no liability for damage resulting from improper use.

1.2 User group

The units are only allowed to be installed, operated and maintained by authorised and instructed personnel who are well acquainted with the units and are informed about possible dangers.

2 Construction and operation

2.1 Construction

The TopVent® TH unit consists of the following components:

- Filter box (option):
  A filter box with pocket filters or a flat filter box with pleated cell filters is optionally available for air filtration.
  Filter class: ISO Coarse 60 %
- Heating section:
  – Heating coil for heating the supply air with hot water
- Fan unit:
  – Radial fan with energy-saving EC motor
- Air-Injector:
  The Air-Injector is a patented, infinitely variable vortex air distributor for the draught-free introduction of air into the hall under changing operating conditions.

As part of the TopTronic® C control system, the unit control box is an integral component.

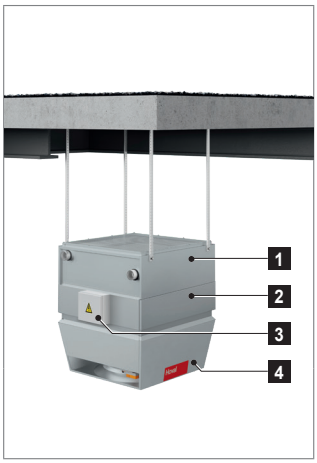

1	Heating section
2	Fan unit
3	Unit control box
4	Air-Injector

Fig. B1:
TopVent® TH components

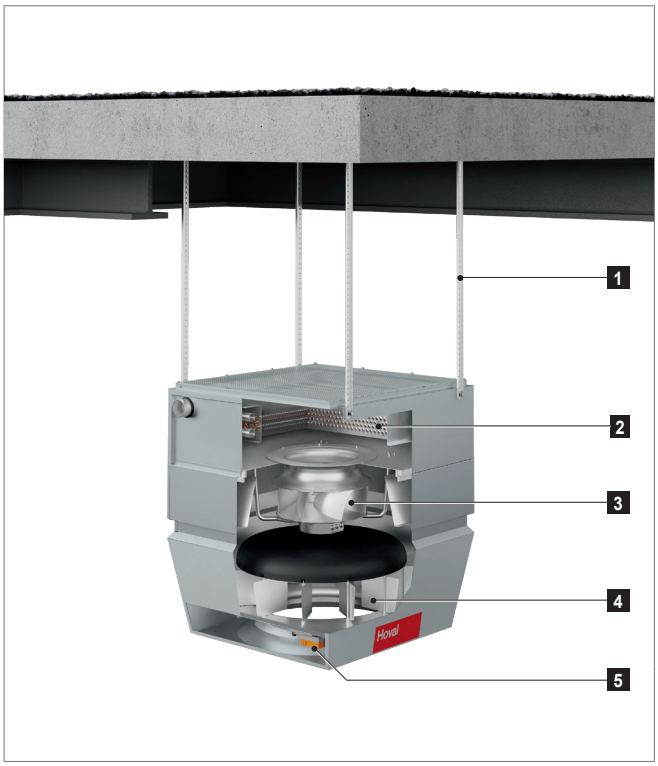

1	Suspension set
2	Heating coil
3	Fan
4	Air-Injector
5	Actuator Air-Injector

Fig. B2: TopVent® TH construction

2.2 Function diagram

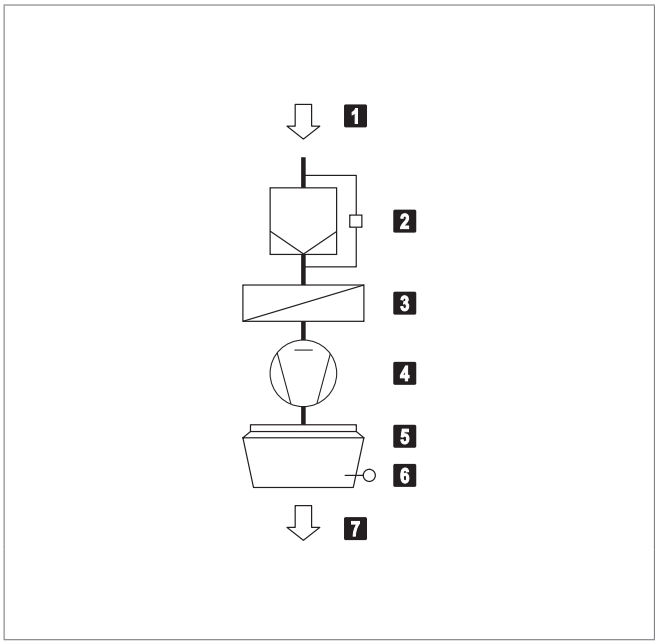

1	Extract air
2	Air filter with differential pressure switch (option)
3	Heating coil
4	Fan
5	Air-Injector with actuator
6	Supply air temperature sensor
7	Supply air

Fig. B3: TopVent® TH function diagram

2.3 Operating modes

The TopVent® TH has the following operating modes:
- Recirculation
- Recirculation speed 1
- Standby

The TopTronic® C control system regulates these operating modes automatically for each control zone in accordance with the specifications in the calendar. The following points also apply:
- The operating mode of a control zone can be switched over manually.
- Each TopVent® unit can operate individually in a local operating mode: Off, Recirculation, Recirculation speed 1

Code	Operating mode		Description
REC	**Recirculation** On/off-operation: If heating is required, the unit draws in room air, heats it and blows it back into the room. The room temperature set value day is active.	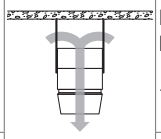	Fan ..... speed 1 / 2 [1)] Heating ..... on [1)] [1)] Depending on heat demand
DES	■ Destratification: To avoid heat build-up under the ceiling, it may be appropriate to switch on the fan when there is no heat demand (either in permanent operation or in on/off operation depending on the temperature stratification, as desired).		Fan ..... speed 2 Heating ..... off
REC1	**Recirculation speed 1** The same as REC, but the unit operates only at speed 1 (low air flow rate)	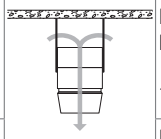	Fan ..... speed 1 Heating ..... on [1)] [1)] Depending on heat demand
DES	■ Destratification: The same as for REC, but the unit operates only at speed 1		Fan ..... speed 1 Heating ..... off
ST	**Standby** The unit is ready for operation; the following operating modes are activated if required:	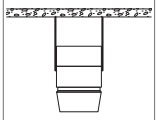	
CPR	■ Cooling protection: If the room temperature drops below the set value for cooling protection, the unit heats up the room in recirculation operation.		Fan ..... speed 2 Heating ..... on
L_OFF	**Off** (local operating mode) The unit is switched off; frost protection for the unit remains active.	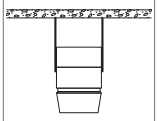	Fan ..... off Heating ..... off
–	**Forced heating** The unit draws in room air, warms it and blows it back into the room. Forced heating is activated by connecting the unit to a power supply (only if there is no bus connection to the zone controller). For example, it is suitable for heating the hall before taking the control system into operation or if the controller fails during the heating period.		Fan ..... speed 2 Heating ..... on

Table B1: TopVent® TH operating modes

3 Technical data

3.1 Type code

TH - 6 A - ...

Unit type
TopVent® TH

Unit size
6 or 9

Heating section
A with coil type A
B with coil type B
C with coil type C

Further options

Table B2: Type code

3.2 Application limits

Extract air temperature	max.	°C	50
Moisture content of extract air	max.	g/kg	15
Supply air temperature	max.	°C	60
Temperature of the heating medium [1]	max.	°C	90
Pressure of the heating medium	max.	kPa	800
The units cannot be used in: ■ Damp locations ■ Places with a corrosive or aggressive environment ■ Spaces with a large amount of dust ■ Areas where there is danger of explosion			
[1] Design for higher temperatures on request			

Table B3: Application limits

3.3 Electrical connection

Unit type		TH-6	TH-9
Supply voltage	VAC	3 × 400	3 × 400
Permitted voltage tolerance	%	± 5	± 5
Frequency	Hz	50	50
Connected load	kW	1.5	3.3
Current consumption max.	A	3.0	5.9
Series fuse	A	13	13
Degree of protection	-	IP54	IP54

Table B4: Electrical connection

3.4 Air flow rate

Unit type		TH-6	TH-9
Nominal air flow rate	m³/h	6000	9000
Floor area covered			
■ for applications with higher comfort requirements (e.g. production halls, assembly halls, sports halls)	m²	537	946
■ for applications with low comfort requirements (e.g. warehouses, logistics centres)	m²	953	1674

Table B5: Air flow rate

3.5 Sound level

Unit type			TH-6C	TH-9C
Sound pressure level (at a distance of 5 m) [1]		dB(A)	58	56
Total sound power level		dB(A)	80	78
Octave sound power level	63 Hz	dB	77	79
	125 Hz	dB	79	82
	250 Hz	dB	86	76
	500 Hz	dB	75	75
	1000 Hz	dB	73	73
	2000 Hz	dB	71	70
	4000 Hz	dB	64	63
	8000 Hz	dB	55	53

[1] with a hemispherical radiation pattern in a low-reflection room

Table B6: Sound level

3.6 Heat output

Heating medium temperature			80/60 °C					60/40 °C				
Size	Type	t_{room}	Q	H_{max}	t_S	Δp_W	m_W	Q	H_{max}	t_S	Δp_W	m_W
		°C	kW	m	°C	kPa	l/h	kW	m	°C	kPa	l/h
TH-6	A	16	32.8	13.4	34.2	7	1410	18.8	16.8	27.3	2	807
		20	30.3	14.0	37.0	6	1301	16.2	17.9	30.0	2	697
	B	16	47.0	11.6	41.3	13	2020	26.9	14.6	31.3	4	1157
		20	43.4	12.0	43.5	11	1864	23.3	15.5	33.5	3	1001
	C	16	76.0	9.4	55.6	18	3267	45.0	11.8	40.3	6	1935
		20	70.3	9.8	56.8	16	3022	39.3	12.5	41.5	5	1690
TH-9	A	16	55.5	13.6	36.6	8	2386	31.7	17.0	28.5	3	1364
		20	51.2	14.1	38.9	7	2201	27.4	18.1	31.1	2	1179
	B	16	71.2	12.2	41.5	12	3060	40.6	15.4	31.4	4	1746
		20	65.7	12.7	43.7	10	2823	35.1	16.5	33.6	3	1509
	C	16	117.9	9.8	56.9	18	5066	69.9	12.3	41.1	6	3003
		20	109.1	10.2	58.0	15	4686	61.0	13.1	42.1	5	2622

Legend:
- Type = Type of coil
- t_{room} = Room air temperature
- Q = Heat output
- H_{max} = Maximum mounting height
- t_S = Supply air temperature
- Δp_W = Water pressure drop
- m_W = Water quantity

Reference:
- At room air temperature 16 °C: extract air temperature 18 °C
- At room air temperature 20 °C: extract air temperature 22 °C

Table B7: Heat output

3.7 Product information according to ErP

Model	TopVent® TH						Unit
	6A	6B	6C	9A	9B	9C	
Cooling capacity (sensible) ($P_{rated,c}$)	–	–	–	–	–	–	kW
Cooling capacity (latent) ($P_{rated,c}$)	–	–	–	–	–	–	kW
Heating capacity ($P_{rated,h}$)	13.2	18.9	29.8	22.6	28.5	46.2	kW
Total electric power input (P_{elec})	0.67	0.69	0.78	0.91	0.93	1.02	kW
Sound power level (L_{WA})	79	79	80	77	77	78	dB
Contact	Hoval Aktiengesellschaft Austrasse 70, 9490 Vaduz, Liechtenstein www.hoval.com						

Table B8: Product information according to Commission Regulation (EU) 2016/2281, Table 13

3.8 Dimensions and weights

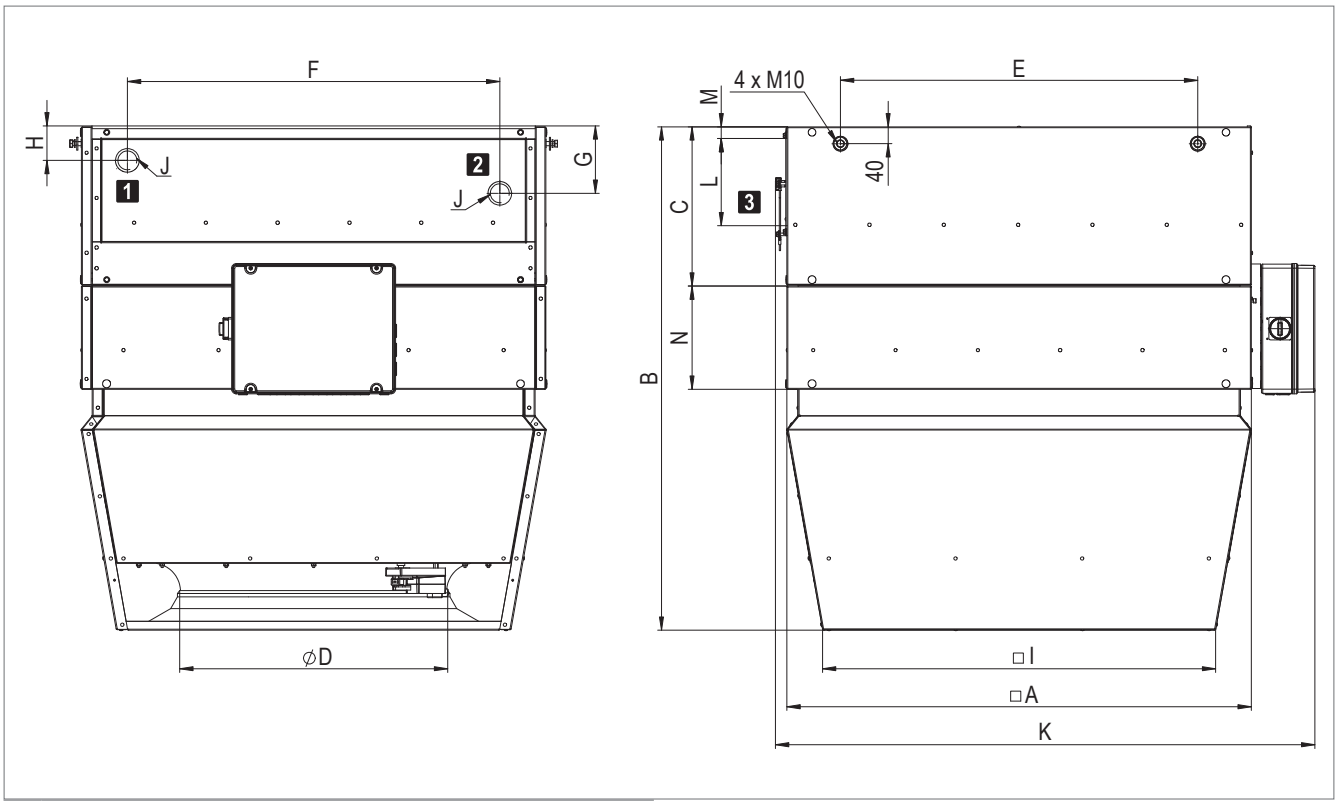

1	Return heating
2	Flow heating
3	Access panel, heating coil

Fig. B4: TopVent® TH dimensional drawing

Unit size		TH-6			TH-9		
Coil type		A	B	C	A	B	C
A	mm	900			1100		
B	mm	1056			1192		
C	mm	350			377		
D	mm	500			630		
E	mm	594			846		
F	mm	758			882		
G	mm	152			160		
H	mm	74			80		
I	mm	760			935		
K	mm	1077			1277		
L	mm	140			207		
M	mm	40			27		
N	mm	215			245		
J	"	Rp 1¼ (internal)			Rp 1½ (internal)		
Water content of heating coil	l	4.6	4.6	7.9	7.4	7.4	12.4
Weight	kg	125	125	132	208	208	219

Table B9: TopVent® TH dimensions and weights

4 Specification texts

4.1 TopVent® TH

Recirculation unit for heating rooms up to 25 m in height with central heat supply; equipped with highly efficient air distributor.

The unit consists of the following components:
- Fan unit
- Heating section
- Air-Injector or outlet nozzle
- Unit control box or terminal box
- Optional components

The TopVent® TH unit complies with all the requirements of the Ecodesign Regulation (EU) 2024/1781. It is a system of the “fan coil unit” type, provided for in Commission Regulation (EU) 2016/2281.

Fan unit

Configured as radial fan with high-efficiency EC motor, backwards-curved, 3D contoured blades and free-running rotor made of a high-performance composite material, aerodynamically optimised inflow nozzle, low-noise, with integrated overload protection.

Heating section

Housing made of magnesium zinc sheet, air-tight, flame retardant, hygienic and easy to maintain because of ageing-resistant, silicone-free sealing materials.
The heating section contains:
- The highly efficient heating coil consisting of seamless copper pipes with pressed-on, optimised and profiled aluminium fins and manifolds made of copper; for connection to the hot water supply

Air-Injector

Design with Air-Injector
Housing made of magnesium zinc sheet, air-tight, flame retardant, hygienic and easy to maintain because of ageing-resistant, silicone-free sealing materials, with:
- Vortex air distributor with concentric outlet nozzle, adjustable vanes and integrated absorber hood
- Actuator for infinitely variable adjustment of the air distribution from vertical to horizontal
  - for draught-free air distribution in the hall under changing operating conditions
  - for the rapid and large-area reduction of temperature stratification in the room through induction of secondary air and strong mixing of the room air with supply air
- Supply air temperature sensor

Design with outlet nozzle (variant)
Housing made of magnesium zinc sheet, air-tight, flame retardant, hygienic and easy to maintain because of ageing-resistant, silicone-free sealing materials. Concentric outlet nozzle with a supply air sensor.

Unit control box

Design with unit control box
Control box fitted at the side of the unit for connection of the power supply and housing the control components that facilitate energy-optimised operation, controlled by the control system TopTronic® C. Plastic casing, degree of protection IP56. The following components are installed:
- Isolation switch
- Circuit board with all required electrical components, unit controller (clipped on) as well as connection terminals for the following external connections:
  - Heating valve
  - Heating pump
  - Return temperature sensor
  - Door contact

The circuit board is fitted with push-in terminals facilitating easy installation of the connection cables. All components in the unit control box as well as sensors and actuators in the unit are fully factory-wired.
Power supply and bus connection to be installed on site.

Design with terminal box (variant)
Terminal box fitted at the side of the unit for connection of the power supply and peripheral components of the unit. Plastic casing, degree of protection IP56. The following components are installed:

- Isolation switch
- Circuit board with all required electrical components as well as connection terminals for the following signals:
  - Input Enable fan
  - Input Control signal fan
  - Output Control signal next fan
  - Input Control signal actuator Air-Injector
  - Output Control signal next actuator Air-Injector
  - Output Feedback control signal Air-Injector
  - Output Error
- The following sensors and actuators in the unit are factory-wired:
  - Fan
  - Supply air temperature sensor
  - Actuator Air-Injector

Options for the unit

Suspension set
For ceiling installation of the unit consisting of 4 pairs U-profiles made of magnesium zinc sheet, height-adjustable to 1300 mm.

Filter box
Housing made of magnesium zinc sheet with 2 ISO coarse 60% bag filters (G4), with differential pressure switch for filter monitoring, factory-wired to the circuit board in the unit control box.

Flat filter box
Housing made of magnesium zinc sheet with 4 pleated ISO coarse 60% cell filters (G4), with differential pressure switch for filter monitoring, factory-wired to the circuit board in the unit control box.

Standard paint finish
Exterior painting in Hoval red (RAL 3000), including optional components and suspension set.

Paint finish as desired
Exterior painting of the unit in choice of RAL colour, including optional components and suspension set.

Recirculation silencer
As an attachment to the unit, made of magnesium zinc sheet, lined with sound insulation matting, insertion attenuation 3 dB.

Hydraulic assembly diverting system
Prefabricated assembly for hydraulic diverting system, consisting of mixing valve, regulating valve, ball valve, automatic air vent and screw connections for connection to the unit and to the distributor circuit; mixing valve with plug-in connection, sized for the coil in the unit and the Hoval TopTronic® C control system.

Mixing valve
Mixing valve with modulating rotary actuator and plug-in connection, sized for the coil in the unit.

Pump control for mixing or injection system
Electrical components for controlling a mixing or injection circuit in the load circuit, factory-installed in the unit control box.

Return temperature sensor
Temperature sensor for monitoring the heating medium.

4.2 TopTronic® C – System control

Zone-based control system for the energy-optimised operation of decentralised Hoval indoor climate systems. Maximum system size per system bus: 64 control zones with up to 10 supply and extract air handling units or supply air units and 10 recirculation units each.

Zone allocation
Configured in advance for the customer at the factory:

	Room designation	Unit type
Zone 1:	_____	_____
Zone 2:	_____	_____
…		

System structure
- Zone control panel made of coated sheet steel (light grey RAL 7035), … x … x … mm, with:
  - System operator terminal
  - Fresh air temperature sensor
  - 1 zone controller and 1 room temperature sensor per zone (expandable to up to 4 room temperature sensors per zone)
  - Safety relay
  - Electrical cabinet internally pre-wired, all components routed to terminals
- Zone bus: as serial bus for communication with all controllers in one control zone, with robust bus protocol via shielded, twisted bus cable (provided by the client)
- Unit controller: installed in the particular indoor climate unit, works autonomously according to the specifications of the zone controller
- Heating/cooling demand per zone with feedback monitoring

Functions, standard
- Zone-based autonomous room control. Temperature and ventilation control separately adjustable for each zone
- Room temperature control via room-supply air cascade by means of energy-optimised double sequence control with priority circuit for energy recovery (supply and extract air handling units)
- Intelligent automatic heating to reach the desired room temperature at the switching time
- 5 adjustable room temperature set values per zone:
  - Cooling protection (lower setpoint in Standby)
  - Overheating protection (upper setpoint in Standby)
  - Room set value winter
  - Room set value summer
  - Night cooling set value (free cooling) (supply and extract air handling units, supply air units)
- Destratification mode for even temperature distribution
- Main operating modes of supply and extract air handling units:
  VE .... Ventilation, infinitely variably adjustment
  AQ.... Air quality, automatic control with Hoval combination sensor (option), optional reference variable:
  – CO_2 or VOC
  – Air humidity (optimised dehumidification mode)
  REC . Recirculation, infinitely variably adjustment
  DES.. Destratification
  EA .... Exhaust air, infinitely variably adjustment
  SA .... Supply air, infinitely variably adjustment
  ST .... Standby
- Main operating modes of supply air units:
  REC . Recirculation, infinitely variably adjustment
  DES.. Destratification
  SA .... Supply air, infinitely variably adjustment
  With Hoval combination sensor (option) also demand-driven control of the fresh air ratio, optional reference variable CO_2 or VOC
  ST .... Standby
- Main operating modes of recirculation units:
  REC . Recirculation, infinitely variably adjustment
  DES.. Destratification
  ST .... Standby
- Forced heating (construction site heating) can be activated on each device before completion of the overall system (activation by Hoval service technician)
- Control of draught-free air distribution with the Hoval Air-Injector: the discharge direction is adjusted infinitely variably and automatically according to the respective operating condition and the existing temperatures (heating/cooling).

Operation
- TopTronic® C-ST system operator terminal: touch panel for visualisation and control of all Hoval indoor climate units registered on the bus

Options for operation
- Activation of the system operator terminal for VNC access, for visualisation on customer's PC
- TopTronic® C-ZT as zone operator terminal: for simple on-site operation of a control zone
- Manual operating selector switches
- Manual operating selector buttons
- Operating of the units via building management system via standardised interfaces:
  – BACnet
  – Modbus IP
  – Modbus RTU

Alarms, protection

- Central alarm management with registration of all alarms (timestamp, priority, status) in an alarm list and alarm memory of the last 50 alarms; forwarding via e-mail can be set in the parameters.
- If there is a failure of communication, bus stations, sensor systems or supply media, each part of the system transitions to a protection mode which safeguards operation.
- A maintenance mode implemented in the control algorithm for testing all physical data points and alarms guarantees high reliability.
- Pre-programmed data points retrievable via logger function for 1 year

Options for the zone control panel

- Alarm lamp
- Socket

Per zone:

- The change-over between heating and cooling can be either automatic or manual
  - Cooling lock switch for automatic changeover
  - Heating/cooling switch for manual changeover
- Additional room temperature sensors (max. 3)
- Combination sensor room air quality, temperature and humidity
- Combination sensor fresh air temperature and humidity
- Transfer of actual values from external systems (0-10 V; 4-20 mA)
- Transfer of setpoints from external systems (2-10 V; 4-20 mA)
- Load shedding input
- Signal for external extract air fan
- Operating selector switches on terminal
- Operating selector button on terminal
- Control of distributor pump, incl. power supply
- Control box TV | TW Pro

Power distribution:

- Circuit breakers and output terminals for Hoval indoor climate units
- Safety relay (4-pin)

4.3 TopTronic® C – Single zone control panel

Control system for the energy-optimised operation of decentralised Hoval indoor climate systems, standardised package solution for 1 single control zone, expandable with add-on zone control panels. Maximum system size per system bus: 64 control zones with up to 10 supply and extract air handling units or supply air units and 10 recirculation units each.

System structure

- Single zone control panel, designed as compact cabinet for wall installation, made of coated sheet steel (light grey RAL 7035), 380 × 300 × 210 mm, with:
  - System operator terminal
  - Fresh air temperature sensor
  - Zone controller
  - 1 Room temperature sensor (expandable to up to 4 room temperature sensors)
  - Safety relay
  - Electrical cabinet internally pre-wired, all components routed to terminals
- Zone bus: as serial bus for communication with all controllers in one control zone, with robust bus protocol via shielded, twisted bus cable (provided by the client)
- Unit controller: installed in the particular indoor climate unit, works autonomously according to the specifications of the zone controller
- Circuit board with external connections for:
  - Power supply
  - Zone bus
  - Room temperature sensors (max. 4)
  - Fresh air temperature sensor
  - Combination sensor room air quality, temperature and humidity
  - Collective alarm
  - Forced off
  - Heating demand
  - Setpoint heating demand
  - Fault heat supply
  - Cooling demand
  - Fault cold supply
  - External enabling heating/cooling (for automatic changeover)
  - External setting heating/cooling (for manual changeover)
  - Changeover valves heating/cooling
  - External setpoint fresh air ratio
  - Operating selector switch on terminal (digital)
  - Operating selector button on terminal

Functions, standard

- Room temperature control via sequential control of the coils
- Room temperature control via room-supply air cascade by means of energy-optimised double sequence control with priority circuit for energy recovery (supply and extract air handling units)

- Intelligent automatic heating to reach the desired room temperature at the switching time
- 5 adjustable room temperature set values per zone:
  - Cooling protection (lower setpoint in Standby)
  - Overheating protection (upper setpoint in Standby)
  - Room set value winter
  - Room set value summer
  - Night cooling set value (free cooling) (supply and extract air handling units, supply air units)
- Destratification mode for even temperature distribution

- Main operating modes of supply and extract air handling units:
  VE .... Ventilation, infinitely variably adjustment
  AQ.... Air quality, automatic control with Hoval combination sensor (option), optional reference variable CO_2 or VOC
  REC . Recirculation, infinitely variably adjustment
  DES.. Destratification
  EA .... Exhaust air, infinitely variably adjustment
  SA .... Supply air, infinitely variably adjustment
  ST .... Standby

- Main operating modes of supply air units:
  REC . Recirculation, infinitely variably adjustment
  DES.. Destratification
  SA .... Supply air, infinitely variably adjustment
  With Hoval combination sensor (option) also demand-driven control of the fresh air ratio, optional reference variable CO_2 or VOC
  ST .... Standby

- Main operating modes of recirculation units:
  REC . Recirculation, infinitely variably adjustment
  DES.. Destratification
  ST .... Standby

- Forced heating (construction site heating) can be activated on each device before completion of the overall system (activation by Hoval service technician)
- Control of draught-free air distribution with the Hoval Air-Injector: the discharge direction is adjusted infinitely variably and automatically according to the respective operating condition and the existing temperatures (heating/cooling).

Operation

- TopTronic® C-ST system operator terminal: touch panel for visualisation and control of all Hoval indoor climate units registered on the bus

Options for operation

- Activation of the system operator terminal for VNC access, for visualisation on customer's PC
- Operating of the units via building management system via standardised interfaces:
  - BACnet
  - Modbus IP
  - Modbus RTU

Alarms, protection

- Central alarm management with registration of all alarms (timestamp, priority, status) in an alarm list and alarm memory of the last 50 alarms; forwarding via e-mail can be set in the parameters.
- If there is a failure of communication, bus participants, sensor systems or supply media, each part of the system transitions to a protection mode which safeguards operation.
- A maintenance mode implemented in the control algorithm for testing all physical data points and alarms guarantees high reliability.
- Pre-programmed data points retrievable via logger function for 1 year

Options for the single zone control panel

- Add-on zone control panel, designed as compact cabinet for wall installation, made of coated sheet steel (light grey RAL 7035), 380 × 300 × 210 mm, with:
  - Zone controller
  - 1 Room temperature sensor (expandable to up to 4 room temperature sensors)
  - Safety relay
  - Electrical cabinet internally pre-wired, all components routed to terminals
- Additional room temperature sensors (max. 3)
- Combination sensor room air quality, temperature and humidity
- Signal for external extract air fan
- TV | TW Pro control box

4.4 HovalSupervisor cloud TopTronic® C

(Terms of use according to www.hoval.com/hsc are accepted when ordered.)

HovalSupervisor cloud TopTronic® C
Remote access, visualisation, historization, trends, evaluations and alarming for Hoval indoor climate systems with TopTronic® C control

- Project-specific system engineering
- Visualisation of the system statuses, error messages, actual and nominal values of the entire plant system
- Graphical display of the entire plant control system, in order to complete an analysis of sequences and subsequently to be able to perform an optimisation
- Integrated continuous line recorder for a period of 3 years
- Integrated alarm management
- Multi-user system: simultaneous access, 2 users included per plant
- Max. 300 data points historicized
- Max. 10 control zones

Consisting of:

- Project-specific engineering of the visualisation as described above
- Industrial router for connecting the TopTronic® C control system
  - Metal casing installed in the zone control panel
  - Without SIM card, free choice of phone network
  - Router configuration possible via web server
  - Network connections:
    2 x 10/100 Mbit Ethernet
    2 x SIM card slot
  - SMA connections:
    1 x WLAN
    2 x mobile data via integrated antenna
  - Power supply for industrial router installed in zone control panel

HovalSupervisor cloud TopTronic® C subscription
Subscription for use of the HovalSupervisor cloud for visualisation of a TopTronic® C system

- 1 year term (subscription billed once a year)
- Use of the HovalSupervisor cloud and storage of the data in the cloud
- Paid support during business hours (only for the software, not for the system)
- The respective valid conditions of use and the service level agreement (SLA) apply, which can be retrieved online.

Options for HovalSupervisor cloud

- Antenna to improve mobile data reception in conjunction with the HovalSupervisor cloud TopTronic® C
  - Antenna with mounting bracket for on-site installation outside the TopTronic® C zone control panel
  - 2G/3G/4G-LTE/5G-ready
  - SMA port available on the antenna
- Antenna extension cable for connecting the antenna in conjunction with the HovalSupervisor cloud
  - SMA port
  - Double shielded
  - Length: 5 m

4.5 EasyTronic EC

Room temperature controller with timer for TopVent® TH, TC, CH, CC, TV recirculation units and TopVent® TW Pro air curtains, protection rating IP30, with the following functions:

- Recording the room temperature with the integrated temperature sensor
- Connection option for external room temperature sensor
- Room temperature control in on/off mode
- Lowering of the room temperature setpoint value via week programme
- Unit control depending on a door contact switch
- Manual adjustment of the fan speed
- Manual adjustment of air distribution with the Hoval Air-Injector from vertical to horizontal (for TopVent® TH, TC, CH, CC)
- Signal for switching a pump or a valve
- Fan off delay in cooling mode
- External heating/cooling changeover
- Alarm display
- Connection to the building management system via Modbus RTU

Options

- External room temperature sensor (protection rating IP65)

Hoval

C

TopVent® TC

Recirculation units for heating and cooling spaces up to 25 m in height with central heat and cold supply (2-pipe-system)

1 Use 22
2 Construction and operation 22
3 Technical data 26
4 Specification texts 31

1 Use

1.1 Intended use

TopVent® TC units are recirculation units for heating and cooling spaces up to 25 m in height with central heat and cold supply. They have the following functions:

- Heating (with connection to a hot water supply)
- Cooling (with connection to a water chiller)
- Recirculation operation
- Air distribution and destratification with adjustable Air-Injector
- Air filtration (option)

The TopVent® TC unit complies with all the requirements of the Ecodesign Regulation (EU) 2024/1781. It is a system of the “fan coil unit” type, provided for in Commission Regulation (EU) 2016/2281.

The Hoval TopTronic® C integrated control system ensures energy-efficient, demand-based operation of Hoval indoor climate systems.

Intended use also includes compliance with the operating instructions. Any usage over and above this use is considered to be not as intended. The manufacturer can accept no liability for damage resulting from improper use.

1.2 User group

The units are only allowed to be installed, operated and maintained by authorised and instructed personnel who are well acquainted with the units and are informed about possible dangers.

2 Construction and operation

2.1 Construction

The TopVent® TC unit consists of the following components:

- Filter box (option):
  A filter box with pocket filters or a flat filter box with pleated cell filters is optionally available for air filtration.
  Filter class: ISO Coarse 60 %
- Heating/cooling section:
  – Heating/cooling coil for heating and cooling the supply air with hot water or cold water
  – Condensate separator
- Fan unit:
  – Radial fan with energy-saving EC motor
- Air-Injector:
  The Air-Injector is a patented, infinitely variable vortex air distributor for the draught-free introduction of air into the hall under changing operating conditions.

As part of the TopTronic® C control system, the unit control box is an integral component.

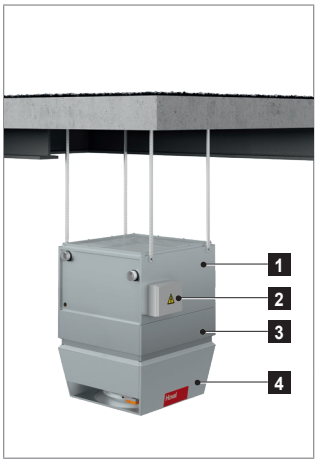

1	Heating/cooling section
2	Unit control box
3	Fan unit
4	Air-Injector

Fig. C1:
TopVent® TC components

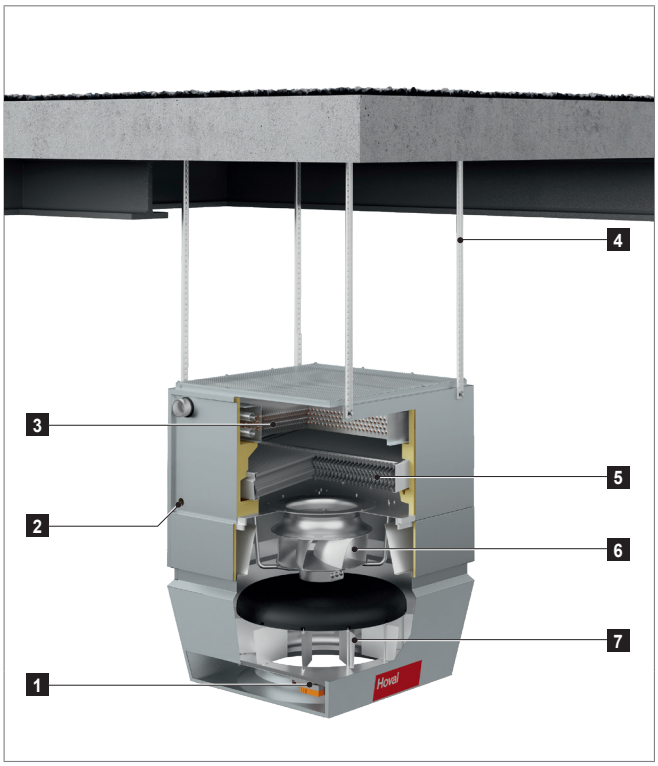

1	Actuator Air-Injector
2	Condensate connection
3	Heating/cooling coil
4	Suspension set
5	Condensate separator
6	Fan
7	Air-Injector

Fig. C2: TopVent® TC construction

2.2 Function diagram

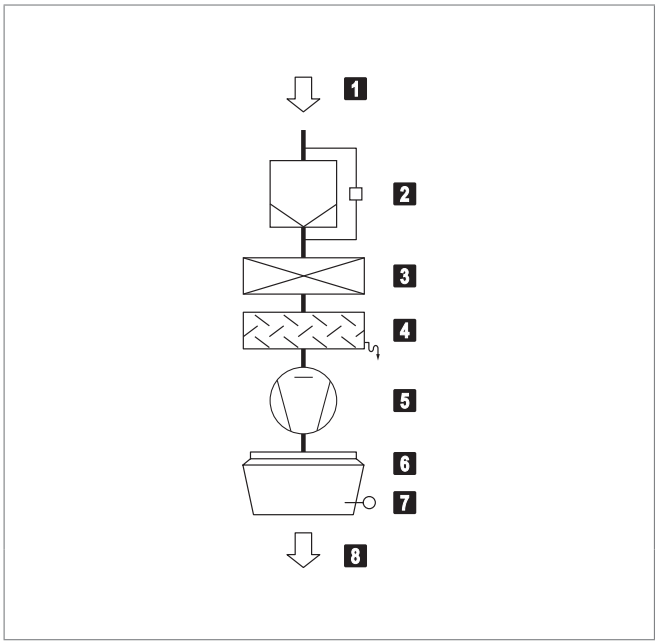

1	Extract air
2	Air filter with differential pressure switch (option)
3	Heating/cooling coil
4	Condensate separator
5	Fan
6	Air-Injector with actuator
7	Supply air temperature sensor
8	Supply air

Fig. C3: TopVent® TC function diagram

2.3 Operating modes

The TopVent® TC has the following operating modes:
- Recirculation
- Recirculation speed 1
- Standby

The TopTronic® C control system regulates these operating modes automatically for each control zone in accordance with the specifications in the calendar. The following points also apply:
- The operating mode of a control zone can be switched over manually.
- Each TopVent® unit can operate individually in a local operating mode: Off, Recirculation, Recirculation speed 1

Code	Operating mode		Description
REC	**Recirculation** On/Off operation: during heat or cool demand, the unit draws in room air, heats or cools it and blows it back into the room. The room temperature set value day is active.	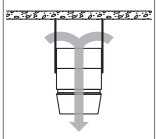	Fan ..... speed 1 / 2 [1)] Heating/cooling ..... on [1)] [1)] Depending on heat or cool demand
DES	■ Destratification: To avoid heat build-up under the ceiling, it may be appropriate to switch on the fan when there is no heat or cool demand (either in permanent operation or in on/off operation depending on the temperature stratification, as desired).		Fan ..... speed 2 Heating/cooling ..... off
REC1	**Recirculation speed 1** The same as REC, but the unit operates only at speed 1 (low air flow rate)	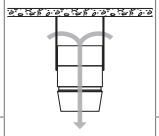	Fan ..... speed 1 Heating/cooling ..... on [1)] [1)] Depending on heat or cool demand
DES	■ Destratification: The same as for REC, but the unit operates only at speed 1		Fan ..... speed 1 Heating/cooling ..... off
ST	**Standby** The unit is ready for operation; the following operating modes are activated if required:	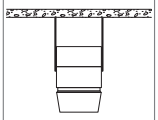	
CPR	■ Cooling protection: If the room temperature drops below the set value for cooling protection, the unit heats up the room in recirculation operation.	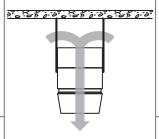	Fan ..... speed 2 Heating ..... on
OPR	■ Overheat protection: If the room temperature rises above the set value for over-heating protection, the unit cools down the room in recirculation operation.		Fan ..... speed 2 Cooling..... on
L_OFF	**Off** (local operating mode) The unit is switched off; frost protection for the unit remains active.	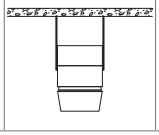	Fan ..... off Heating/cooling ..... off

Code	Operating mode		Description
–	**Forced heating** The unit draws in room air, warms it and blows it back into the room. Forced heating is activated by connecting the unit to a power supply (only if there is no bus connection to the zone controller). For example, it is suitable for heating the hall before taking the control system into operation or if the controller fails during the heating period.	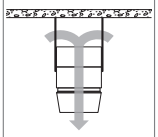	Fan ..... speed 2 Heating ..... on

Table C1: TopVent® TC operating modes

3 Technical data

3.1 Type code

TC - 6 - C ...

Unit type
TopVent® TC

Unit size
6 or 9

Heating/cooling section
C with coil type C
D with coil type D

Further options

Table C2: Type code

3.2 Application limits

Extract air temperature		max.	°C	50
Moisture content of extract air		max.	g/kg	15
Supply air temperature		max.	°C	60
Temperature of the heating medium [1]		max.	°C	90
Pressure of the heating medium		max.	kPa	800
Air flow rate	Size 6: Size 9:	min. min.	m³/h m³/h	3100 5000
Condensate quantity	Size 6: Size 9:	max. max.	kg/h kg/h	90 150
The units cannot be used in: ■ Damp locations ■ Places with a corrosive or aggressive environment ■ Spaces with a large amount of dust ■ Areas where there is danger of explosion				
[1] Design for higher temperatures on request				

Table C3: Application limits

3.3 Electrical connection

Unit type		TC-6	TC-9
Supply voltage	VAC	3 × 400	3 × 400
Permitted voltage tolerance	%	± 5	± 5
Frequency	Hz	50	50
Connected load	kW	1.6	3.4
Current consumption max.	A	3.0	5.9
Series fuse	A	13	13
Degree of protection	-	IP54	IP54

Table C4: Electrical connection

3.4 Air flow rate

Unit type		TC-6	TC-9
Nominal air flow rate	m³/h	6000	9000
Floor area covered			
■ for applications with higher comfort requirements (e.g. production halls, assembly halls, sports halls)	m²	537	946
■ for applications with low comfort requirements (e.g. warehouses, logistics centres)	m²	953	1674

Table C5: TopVent® TC air flow rate

3.5 Sound level

Unit type			TC-6-C	TC-9-C
Sound pressure level (at a distance of 5 m) [1]		dB(A)	59	57
Total sound power level		dB(A)	81	79
Octave sound power level	63 Hz	dB	78	80
	125 Hz	dB	80	83
	250 Hz	dB	87	77
	500 Hz	dB	76	76
	1000 Hz	dB	74	74
	2000 Hz	dB	71	71
	4000 Hz	dB	65	64
	8000 Hz	dB	56	54

[1] with a hemispherical radiation pattern in a low-reflection room

Table C6: Sound level

C

3.6 Heat output

Heating medium temperature			80/60 °C					60/40 °C				
Size	Type	t_{room}	Q	H_{max}	t_S	Δp_W	m_W	Q	H_{max}	t_S	Δp_W	m_W
		°C	kW	m	°C	kPa	l/h	kW	m	°C	kPa	l/h
TC-6	C	16	76.0	9.4	55.6	18	3267	45.0	11.8	40.3	6	1935
		20	70.3	9.8	56.8	16	3022	39.3	12.5	41.5	5	1690
TC-9	C	16	117.9	9.8	56.9	18	5066	69.9	12.3	41.1	6	3003
		20	109.1	10.2	58.0	15	4686	61.0	13.1	42.1	5	2622
	D	16	140.7	9.1	64.4	15	6045	85.4	11.3	46.2	5	3670
		20	130.4	9.5	65.0	13	5600	75.1	12.0	46.8	4	3225

Legend:
- Type = Type of coil
- t_{room} = Room air temperature
- Q = Heat output
- H_{max} = Maximum mounting height
- t_S = Supply air temperature
- Δp_W = Water pressure drop
- m_W = Water quantity

Reference:
- At room air temperature 16 °C: extract air temperature 18 °C
- At room air temperature 20 °C: extract air temperature 22 °C

Table C7: Heat output

3.7 Cooling capacity

Cooling medium temperature				6/12 °C						8/14 °C					
Size	Type	t_{room}	RH_{room}	Q_{sen}	Q_{tot}	t_S	Δp_W	m_W	m_C	Q_{sen}	Q_{tot}	t_S	Δp_W	m_W	m_C
		°C	%	kW	kW	°C	kPa	l/h	kg/h	kW	kW	°C	kPa	l/h	kg/h
TC-6	C	22	50	20.4	20.4	13.9	15	2925	0.0	18.0	18.0	15.1	12	2573	0.0
			70	18.5	27.7	14.9	28	3960	13.5	16.0	21.4	16.1	17	3064	7.9
		26	50	25.2	31.1	15.5	36	4448	8.6	22.7	24.8	16.7	23	3552	3.0
			70	23.2	43.7	16.5	71	6263	30.2	20.8	37.5	17.7	52	5367	24.6
TC-9	C	22	50	31.4	31.4	13.6	15	4496	0.0	27.6	27.6	14.9	12	3947	0.0
			70	28.4	44.7	14.6	31	6401	23.9	24.6	28.2	15.9	12	4031	5.2
		26	50	38.8	49.9	15.2	38	7149	16.3	35.0	35.0	16.4	19	5013	0.0
			70	35.9	69.8	16.2	75	9989	49.8	32.0	53.2	17.4	44	7619	31.1
	D	22	50	37.1	37.1	11.8	13	5307	0.0	32.2	32.2	13.4	10	4613	0.0
			70	34.6	56.7	12.6	30	8118	32.5	29.7	45.1	14.2	19	6459	22.6
		26	50	46.4	62.4	12.7	36	8941	23.5	41.6	50.9	14.3	24	7282	13.6
			70	43.9	87.4	13.5	70	12513	63.9	39.1	75.8	15.1	53	10854	54.0

Legend:
- Type = Type of coil
- t_{room} = Room air temperature
- RH_{room} = Relative humidity of the room air
- Q_{sen} = Sensible cooling capacity
- Q_{tot} = Total cooling capacity
- t_S = Supply air temperature
- Δp_W = Water pressure drop
- m_W = Water quantity
- m_C = Condensate quantity

Reference:
- At room air temperature 22 °C: extract air temperature 24 °C
- At room air temperature 26 °C: extract air temperature 28 °C

Table C8: Cooling capacity

3.8 Product information according to ErP

Model	TopVent® TC			Unit
	6-C	9-C	9-D	
Cooling capacity (sensible) ($P_{rated,c}$)	26.5	41.0	48.6	kW
Cooling capacity (latent) ($P_{rated,c}$)	5.6	7.3	15.2	kW
Heating capacity ($P_{rated,h}$)	29.8	46.2	54.2	kW
Total electric power input (P_{elec})	0.91	1.18	1.29	kW
Sound power level (L_{WA})	81	79	80	dB
Contact	Hoval Aktiengesellschaft Austrasse 70, 9490 Vaduz, Liechtenstein www.hoval.com			

Table C9: Product information according to Commission Regulation (EU) 2016/2281, Table 13

3.9 Dimensions and weights

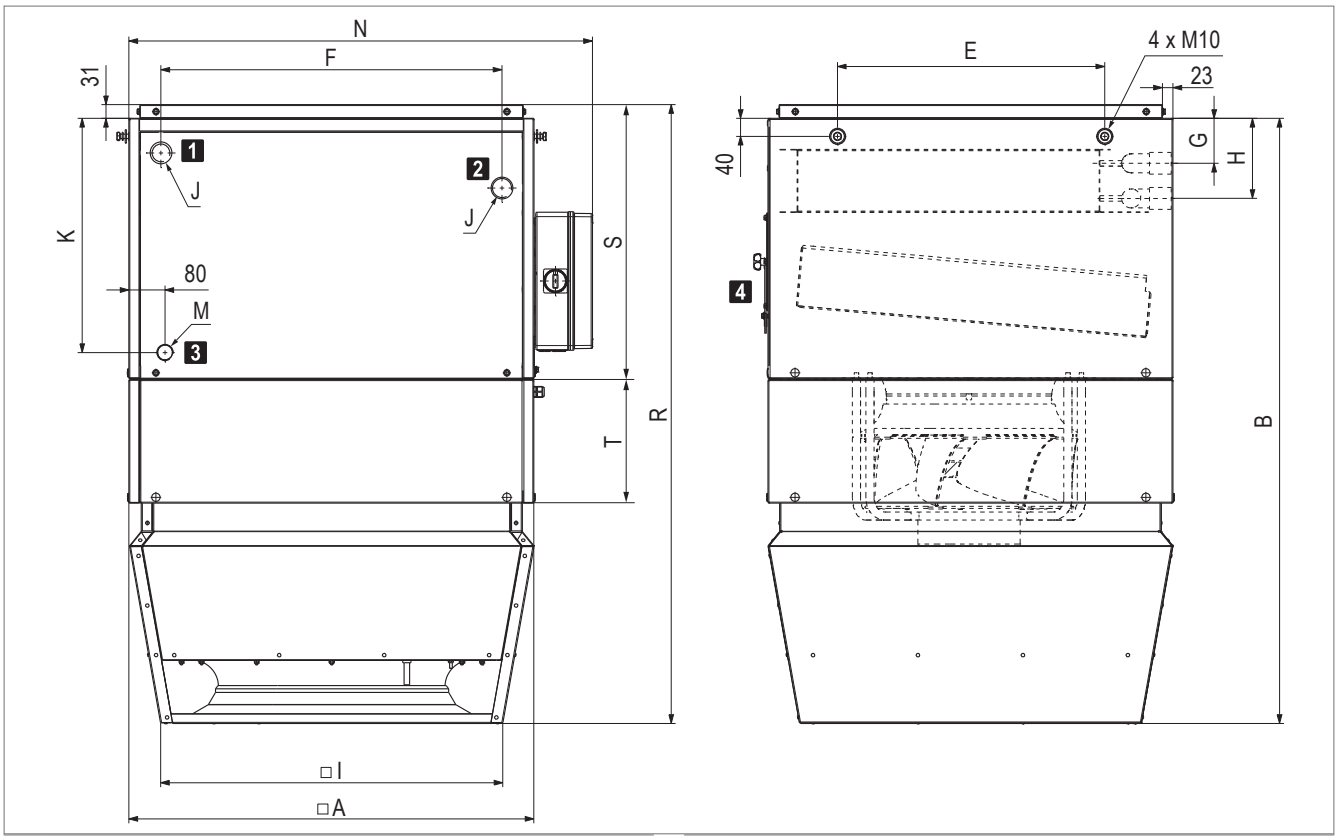

1 Return heating/cooling	3 Condensate connection
2 Flow heating/cooling	4 Access panel, condensate separator

Fig. C4: TopVent® TC dimensional drawing

Unit size		TC-6	TC-9	TC-9
Coil type		C	C	D
A	mm	900	1100	1100
B	mm	1344	1430	1430
E	mm	594	846	846
F	mm	758	882	882
G	mm	77	93	85
H	mm	155	171	180
I	mm	760	935	935
K	mm	521	558	558
N	mm	1030	1230	1230
R	mm	1375	1463	1463
S	mm	579	615	615
T	mm	275	245	245
J	"	Rp 1¼ (internal)	Rp 1½ (internal)	Rp 2 (internal)
M	"	G 1 (external)	G 1 (external)	G 1 (external)
Water content of heating/cooling coil	l	7.9	12.4	19.2
Weight	kg	194	265	276

Table C10: TopVent® TC dimensions and weights

4 Specification texts

4.1 TopVent® TC

Recirculation unit for heating and cooling rooms up to 25 m in height with central heat and cold supply (2-pipe system); equipped with highly efficient air distributor.

The unit consists of the following components:
- Fan unit
- Heating/cooling section
- Air-Injector
- Unit control box or terminal box
- Optional components

The TopVent® TC unit complies with all the requirements of the Ecodesign Regulation (EU) 2024/1781. It is a system of the “fan coil unit” type, provided for in Commission Regulation (EU) 2016/2281.

Fan unit

Configured as radial fan with high-efficiency EC motor, backwards-curved, 3D contoured blades and free-running rotor made of a high-performance composite material, aerodynamically optimised inflow nozzle, low-noise, with integrated overload protection.

Heating/cooling section

Housing made of magnesium zinc sheet, air-tight, flame retardant, hygienic and easy to maintain because of ageing-resistant, silicone-free sealing materials, internally insulated with close-pored polyurethane.
The heating/cooling section contains:
- The highly efficient heating/cooling coil consisting of seamless copper pipes with pressed-on, optimised and profiled aluminium fins and manifolds made of copper; for connection to the hot water and cold water supply
- The pull-out condensate separator with collecting channel, made of high-quality corrosion-resistant material, with a downslope in all directions for rapid draining
- The condensate trap for connecting to a condensate drain (supplied)

Air-Injector

Housing made of magnesium zinc sheet, air-tight, flame retardant, hygienic and easy to maintain because of ageing-resistant, silicone-free sealing materials, internally insulated with closed-cell polyethylene foam, with:
- Vortex air distributor with concentric outlet nozzle, adjustable vanes and integrated absorber hood
- Actuator for infinitely variable adjustment of the air distribution from vertical to horizontal
  - for draught-free air distribution in the hall under changing operating conditions
  - for the rapid and large-area reduction of temperature stratification in the room through induction of secondary air and strong mixing of the room air with supply air
- Supply air temperature sensor

Unit control box

Design with unit control box
Control box fitted at the side of the unit for connection of the power supply and housing the control components that facilitate energy-optimised operation, controlled by the control system TopTronic® C. Plastic casing, degree of protection IP56. The following components are installed:
- Isolation switch
- Circuit board with all required electrical components, unit controller (clipped on) as well as connection terminals for the following external connections:
  - Heating/cooling valve
  - Heating/cooling pump
  - Return temperature sensor
  - Condensate pump
  - Door contact

The circuit board is fitted with push-in terminals facilitating easy installation of the connection cables. All components in the unit control box as well as sensors and actuators in the unit are fully factory-wired.
Power supply and bus connection to be installed on site.

Design with terminal box (variant)
Terminal box fitted at the side of the unit for connection of the power supply and peripheral components of the unit. Plastic casing, degree of protection IP56. The following components are installed:

- Isolation switch
- Circuit board with all required electrical components as well as connection terminals for the following signals:
  - Input Enable fan
  - Input Control signal fan
  - Output Control signal next fan
  - Input Control signal actuator Air-Injector
  - Output Control signal next actuator Air-Injector
  - Output Feedback control signal Air-Injector
  - Output Error
- The following sensors and actuators in the unit are factory-wired:
  - Fan
  - Supply air temperature sensor
  - Actuator Air-Injector

Options for the unit

Suspension set
For ceiling installation of the unit consisting of 4 pairs U-profiles made of magnesium zinc sheet, height-adjustable to 1300 mm.

Filter box
Housing made of magnesium zinc sheet with 2 ISO coarse 60% bag filters (G4), with differential pressure switch for filter monitoring, factory-wired to the circuit board in the unit control box.

Flat filter box
Housing made of magnesium zinc sheet with 4 pleated ISO coarse 60% cell filters (G4), with differential pressure switch for filter monitoring, factory-wired to the circuit board in the unit control box.

Standard paint finish
Exterior painting in Hoval red (RAL 3000), including optional components and suspension set.

Paint finish as desired
Exterior painting of the unit in choice of RAL colour, including optional components and suspension set.

Recirculation silencer
As an attachment to the unit, made of magnesium zinc sheet, lined with sound insulation matting, insertion attenuation 3 dB.

Hydraulic assembly diverting system
Prefabricated assembly for hydraulic diverting system, consisting of mixing valve, regulating valve, ball valve, automatic air vent and screw connections for connection to the unit and to the distributor circuit; mixing valve with plug-in connection, sized for the coil in the unit and the Hoval TopTronic® C control system.

Mixing valve
Mixing valve with modulating rotary actuator and plug-in connection, sized for the coil in the unit.

Condensate pump
Consisting of a centrifugal pump and a drip tray, max. delivery rate of 150 l/h with a delivery head of 3 m. Condensate pump with connection cable enclosed.

Pump control for mixing or injection system
Electrical components for controlling a mixing or injection circuit in the load circuit, factory-installed in the unit control box.

Return temperature sensor
Temperature sensor for monitoring the heating medium.

4.2 TopTronic® C – System control

Zone-based control system for the energy-optimised operation of decentralised Hoval indoor climate systems. Maximum system size per system bus: 64 control zones with up to 10 supply and extract air handling units or supply air units and 10 recirculation units each.

Zone allocation
Configured in advance for the customer at the factory:

	Room designation	Unit type
Zone 1:	_____	_____
Zone 2:	_____	_____
…		

System structure
- Zone control panel made of coated sheet steel (light grey RAL 7035), … x … x … mm, with:
  - System operator terminal
  - Fresh air temperature sensor
  - 1 zone controller and 1 room temperature sensor per zone (expandable to up to 4 room temperature sensors per zone)
  - Safety relay
  - Electrical cabinet internally pre-wired, all components routed to terminals
- Zone bus: as serial bus for communication with all controllers in one control zone, with robust bus protocol via shielded, twisted bus cable (provided by the client)
- Unit controller: installed in the particular indoor climate unit, works autonomously according to the specifications of the zone controller
- Heating/cooling demand per zone with feedback monitoring

Functions, standard
- Zone-based autonomous room control. Temperature and ventilation control separately adjustable for each zone
- Room temperature control via room-supply air cascade by means of energy-optimised double sequence control with priority circuit for energy recovery (supply and extract air handling units)
- Intelligent automatic heating to reach the desired room temperature at the switching time
- 5 adjustable room temperature set values per zone:
  - Cooling protection (lower setpoint in Standby)
  - Overheating protection (upper setpoint in Standby)
  - Room set value winter
  - Room set value summer
  - Night cooling set value (free cooling) (supply and extract air handling units, supply air units)
- Destratification mode for even temperature distribution
- Main operating modes of supply and extract air handling units:
  VE .... Ventilation, infinitely variably adjustment
  AQ.... Air quality, automatic control with Hoval combination sensor (option), optional reference variable:
  – CO_2 or VOC
  – Air humidity (optimised dehumidification mode)
  REC . Recirculation, infinitely variably adjustment
  DES.. Destratification
  EA .... Exhaust air, infinitely variably adjustment
  SA .... Supply air, infinitely variably adjustment
  ST .... Standby
- Main operating modes of supply air units:
  REC . Recirculation, infinitely variably adjustment
  DES.. Destratification
  SA .... Supply air, infinitely variably adjustment
  With Hoval combination sensor (option) also demand-driven control of the fresh air ratio, optional reference variable CO_2 or VOC
  ST .... Standby
- Main operating modes of recirculation units:
  REC . Recirculation, infinitely variably adjustment
  DES.. Destratification
  ST .... Standby
- Forced heating (construction site heating) can be activated on each device before completion of the overall system (activation by Hoval service technician)
- Control of draught-free air distribution with the Hoval Air-Injector: the discharge direction is adjusted infinitely variably and automatically according to the respective operating condition and the existing temperatures (heating/cooling).

Operation
- TopTronic® C-ST system operator terminal: touch panel for visualisation and control of all Hoval indoor climate units registered on the bus

Options for operation
- Activation of the system operator terminal for VNC access, for visualisation on customer's PC
- TopTronic® C-ZT as zone operator terminal: for simple on-site operation of a control zone
- Manual operating selector switches
- Manual operating selector buttons
- Operating of the units via building management system via standardised interfaces:
  – BACnet
  – Modbus IP
  – Modbus RTU

Alarms, protection

- Central alarm management with registration of all alarms (timestamp, priority, status) in an alarm list and alarm memory of the last 50 alarms; forwarding via e-mail can be set in the parameters.
- If there is a failure of communication, bus stations, sensor systems or supply media, each part of the system transitions to a protection mode which safeguards operation.
- A maintenance mode implemented in the control algorithm for testing all physical data points and alarms guarantees high reliability.
- Pre-programmed data points retrievable via logger function for 1 year

Options for the zone control panel

- Alarm lamp
- Socket

Per zone:

- The change-over between heating and cooling can be either automatic or manual
  - Cooling lock switch for automatic changeover
  - Heating/cooling switch for manual changeover
- Additional room temperature sensors (max. 3)
- Combination sensor room air quality, temperature and humidity
- Combination sensor fresh air temperature and humidity
- Transfer of actual values from external systems (0-10 V; 4-20 mA)
- Transfer of setpoints from external systems (2-10 V; 4-20 mA)
- Load shedding input
- Signal for external extract air fan
- Operating selector switches on terminal
- Operating selector button on terminal
- Control of distributor pump, incl. power supply
- Control box TV | TW Pro

Power distribution:

- Circuit breakers and output terminals for Hoval indoor climate units
- Safety relay (4-pin)

4.3 TopTronic® C – Single zone control panel

Control system for the energy-optimised operation of decentralised Hoval indoor climate systems, standardised package solution for 1 single control zone, expandable with add-on zone control panels. Maximum system size per system bus: 64 control zones with up to 10 supply and extract air handling units or supply air units and 10 recirculation units each.

System structure

- Single zone control panel, designed as compact cabinet for wall installation, made of coated sheet steel (light grey RAL 7035), 380 × 300 × 210 mm, with:
  - System operator terminal
  - Fresh air temperature sensor
  - Zone controller
  - 1 Room temperature sensor (expandable to up to 4 room temperature sensors)
  - Safety relay
  - Electrical cabinet internally pre-wired, all components routed to terminals
- Zone bus: as serial bus for communication with all controllers in one control zone, with robust bus protocol via shielded, twisted bus cable (provided by the client)
- Unit controller: installed in the particular indoor climate unit, works autonomously according to the specifications of the zone controller
- Circuit board with external connections for:
  - Power supply
  - Zone bus
  - Room temperature sensors (max. 4)
  - Fresh air temperature sensor
  - Combination sensor room air quality, temperature and humidity
  - Collective alarm
  - Forced off
  - Heating demand
  - Setpoint heating demand
  - Fault heat supply
  - Cooling demand
  - Fault cold supply
  - External enabling heating/cooling (for automatic changeover)
  - External setting heating/cooling (for manual changeover)
  - Changeover valves heating/cooling
  - External setpoint fresh air ratio
  - Operating selector switch on terminal (digital)
  - Operating selector button on terminal

Functions, standard

- Room temperature control via sequential control of the coils
- Room temperature control via room-supply air cascade by means of energy-optimised double sequence control with priority circuit for energy recovery (supply and extract air handling units)

- Intelligent automatic heating to reach the desired room temperature at the switching time
- 5 adjustable room temperature set values per zone:
  - Cooling protection (lower setpoint in Standby)
  - Overheating protection (upper setpoint in Standby)
  - Room set value winter
  - Room set value summer
  - Night cooling set value (free cooling) (supply and extract air handling units, supply air units)
- Destratification mode for even temperature distribution

- Main operating modes of supply and extract air handling units:
  VE .... Ventilation, infinitely variably adjustment
  AQ.... Air quality, automatic control with Hoval combination sensor (option), optional reference variable CO_2 or VOC
  REC . Recirculation, infinitely variably adjustment
  DES.. Destratification
  EA .... Exhaust air, infinitely variably adjustment
  SA .... Supply air, infinitely variably adjustment
  ST .... Standby

- Main operating modes of supply air units:
  REC . Recirculation, infinitely variably adjustment
  DES.. Destratification
  SA .... Supply air, infinitely variably adjustment
  With Hoval combination sensor (option) also demand-driven control of the fresh air ratio, optional reference variable CO_2 or VOC
  ST .... Standby

- Main operating modes of recirculation units:
  REC . Recirculation, infinitely variably adjustment
  DES.. Destratification
  ST .... Standby

- Forced heating (construction site heating) can be activated on each device before completion of the overall system (activation by Hoval service technician)
- Control of draught-free air distribution with the Hoval Air-Injector: the discharge direction is adjusted infinitely variably and automatically according to the respective operating condition and the existing temperatures (heating/cooling).

Operation

- TopTronic® C-ST system operator terminal: touch panel for visualisation and control of all Hoval indoor climate units registered on the bus

Options for operation

- Activation of the system operator terminal for VNC access, for visualisation on customer's PC
- Operating of the units via building management system via standardised interfaces:
  - BACnet
  - Modbus IP
  - Modbus RTU

Alarms, protection

- Central alarm management with registration of all alarms (timestamp, priority, status) in an alarm list and alarm memory of the last 50 alarms; forwarding via e-mail can be set in the parameters.
- If there is a failure of communication, bus participants, sensor systems or supply media, each part of the system transitions to a protection mode which safeguards operation.
- A maintenance mode implemented in the control algorithm for testing all physical data points and alarms guarantees high reliability.
- Pre-programmed data points retrievable via logger function for 1 year

Options for the single zone control panel

- Add-on zone control panel, designed as compact cabinet for wall installation, made of coated sheet steel (light grey RAL 7035), 380 × 300 × 210 mm, with:
  - Zone controller
  - 1 Room temperature sensor (expandable to up to 4 room temperature sensors)
  - Safety relay
  - Electrical cabinet internally pre-wired, all components routed to terminals
- Additional room temperature sensors (max. 3)
- Combination sensor room air quality, temperature and humidity
- Signal for external extract air fan
- TV | TW Pro control box

4.4 HovalSupervisor cloud TopTronic® C

(Terms of use according to www.hoval.com/hsc are accepted when ordered.)

HovalSupervisor cloud TopTronic® C
Remote access, visualisation, historization, trends, evaluations and alarming for Hoval indoor climate systems with TopTronic® C control

- Project-specific system engineering
- Visualisation of the system statuses, error messages, actual and nominal values of the entire plant system
- Graphical display of the entire plant control system, in order to complete an analysis of sequences and subsequently to be able to perform an optimisation
- Integrated continuous line recorder for a period of 3 years
- Integrated alarm management
- Multi-user system: simultaneous access, 2 users included per plant
- Max. 300 data points historicized
- Max. 10 control zones

Consisting of:

- Project-specific engineering of the visualisation as described above
- Industrial router for connecting the TopTronic® C control system
  - Metal casing installed in the zone control panel
  - Without SIM card, free choice of phone network
  - Router configuration possible via web server
  - Network connections:
    2 x 10/100 Mbit Ethernet
    2 x SIM card slot
  - SMA connections:
    1 x WLAN
    2 x mobile data via integrated antenna
  - Power supply for industrial router installed in zone control panel

HovalSupervisor cloud TopTronic® C subscription
Subscription for use of the HovalSupervisor cloud for visualisation of a TopTronic® C system

- 1 year term (subscription billed once a year)
- Use of the HovalSupervisor cloud and storage of the data in the cloud
- Paid support during business hours (only for the software, not for the system)
- The respective valid conditions of use and the service level agreement (SLA) apply, which can be retrieved online.

Options for HovalSupervisor cloud

- Antenna to improve mobile data reception in conjunction with the HovalSupervisor cloud TopTronic® C
  - Antenna with mounting bracket for on-site installation outside the TopTronic® C zone control panel
  - 2G/3G/4G-LTE/5G-ready
  - SMA port available on the antenna
- Antenna extension cable for connecting the antenna in conjunction with the HovalSupervisor cloud
  - SMA port
  - Double shielded
  - Length: 5 m

4.5 EasyTronic EC

Room temperature controller with timer for TopVent® TH, TC, CH, CC, TV recirculation units and TopVent® TW Pro air curtains, protection rating IP30, with the following functions:

- Recording the room temperature with the integrated temperature sensor
- Connection option for external room temperature sensor
- Room temperature control in on/off mode
- Lowering of the room temperature setpoint value via week programme
- Unit control depending on a door contact switch
- Manual adjustment of the fan speed
- Manual adjustment of air distribution with the Hoval Air-Injector from vertical to horizontal (for TopVent® TH, TC, CH, CC)
- Signal for switching a pump or a valve
- Fan off delay in cooling mode
- External heating/cooling changeover
- Alarm display
- Connection to the building management system via Modbus RTU

Options

- External room temperature sensor (protection rating IP65)

Hoval

TopVent® THC

Recirculation units for heating and cooling spaces up to 25 m in height with central heat and cold supply (4-pipe-system)

1 Use 38
2 Construction and operation 38
3 Technical data 42
4 Specification texts 48

D

1 Use

1.1 Intended use

TopVent® THC units are recirculation units for heating and cooling spaces up to 25 m in height with central heat and cold supply. They have the following functions:

- Heating (with connection to a hot water supply)
- Cooling (with connection to a water chiller)
- Recirculation operation
- Air distribution and destratification with adjustable Air-Injector
- Air filtration (option)

The TopVent® THC unit complies with all the requirements of the Ecodesign Regulation (EU) 2024/1781. It is a system of the “fan coil unit” type, provided for in Commission Regulation (EU) 2016/2281.

The Hoval TopTronic® C integrated control system ensures energy-efficient, demand-based operation of Hoval indoor climate systems.

Intended use also includes compliance with the operating instructions. Any usage over and above this use is considered to be not as intended. The manufacturer can accept no liability for damage resulting from improper use.

1.2 User group

The units are only allowed to be installed, operated and maintained by authorised and instructed personnel who are well acquainted with the units and are informed about possible dangers.

2 Construction and operation

2.1 Construction

The TopVent® THC unit consists of the following components:

- Filter box (option):
  A filter box with pocket filters or a flat filter box with pleated cell filters is optionally available for air filtration.
  Filter class: ISO Coarse 60 %
- Heating section:
  – Heating coil for heating the supply air with hot water
- Cooling section:
  – Cooling coil for cooling the supply air with cold water
  – Condensate separator
- Fan unit:
  – Radial fan with energy-saving EC motor
- Air-Injector:
  The Air-Injector is a patented, infinitely variable vortex air distributor for the draught-free introduction of air into the hall under changing operating conditions.

As part of the TopTronic® C control system, the unit control box is an integral component.

1	Heating section
2	Cooling section
3	Unit control box
4	Fan unit
5	Air-Injector

Fig. D1: TopVent® THC components

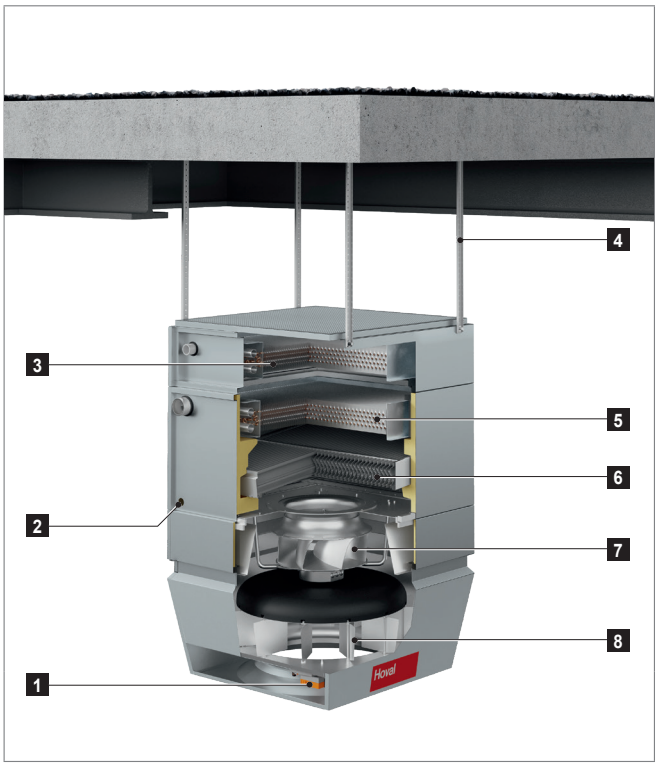

1	Actuator Air-Injector
2	Condensate connection
3	Heating coil
4	Suspension set
5	Cooling coil
6	Condensate separator
7	Fan
8	Air-Injector

Fig. D2: TopVent® THC structure

2.2 Function diagram

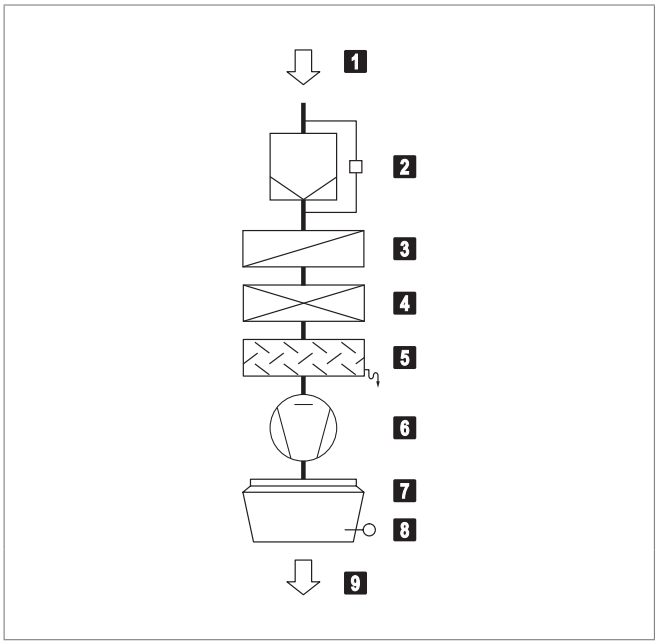

1	Extract air
2	Air filter with differential pressure switch (option)
3	Heating coil
4	Cooling coil
5	Condensate separator
6	Fan
7	Air-Injector with actuator
8	Supply air temperature sensor
9	Supply air

Fig. D3: TopVent® THC function diagram

2.3 Operating modes

The TopVent® THC has the following operating modes:
- Recirculation
- Recirculation speed 1
- Standby

The TopTronic® C control system regulates these operating modes automatically for each control zone in accordance with the specifications in the calendar. The following points also apply:
- The operating mode of a control zone can be switched over manually.
- Each TopVent® unit can operate individually in a local operating mode: Off, Recirculation, Recirculation speed 1

Code	Operating mode		Description
REC	**Recirculation** On/Off operation: during heat or cool demand, the unit draws in room air, heats or cools it and blows it back into the room. The room temperature set value day is active.	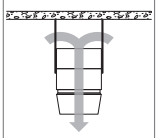	Fan ..... speed 1 / 2 [1)] Heating/cooling ..... on [1)] [1)] Depending on heat or cool demand
DES	■ Destratification: To avoid heat build-up under the ceiling, it may be appropriate to switch on the fan when there is no heat or cool demand (either in permanent operation or in on/off operation depending on the temperature stratification, as desired).		Fan ..... speed 2 Heating/cooling ..... off
REC1	**Recirculation speed 1** The same as REC, but the unit operates only at speed 1 (low air flow rate)	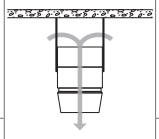	Fan ..... speed 1 Heating/cooling ..... on [1)] [1)] Depending on heat or cool demand
DES	■ Destratification: The same as for REC, but the unit operates only at speed 1		Fan ..... speed 1 Heating/cooling ..... off
ST	**Standby** The unit is ready for operation; the following operating modes are activated if required:	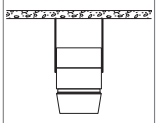	
CPR	■ Cooling protection: If the room temperature drops below the set value for cooling protection, the unit heats up the room in recirculation operation.	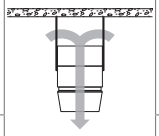	Fan ..... speed 2 Heating ..... on
OPR	■ Overheat protection: If the room temperature rises above the set value for overheating protection, the unit cools down the room in recirculation operation.		Fan ..... speed 2 Cooling..... on
L_OFF	**Off** (local operating mode) The unit is switched off; frost protection for the unit remains active.	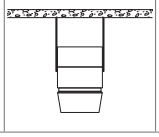	Fan ..... off Heating/cooling ..... off

Code	Operating mode		Description
–	**Forced heating** The unit draws in room air, warms it and blows it back into the room. Forced heating is activated by connecting the unit to a power supply (only if there is no bus connection to the zone controller). For example, it is suitable for heating the hall before taking the control system into operation or if the controller fails during the heating period.	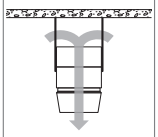	Fan ..... speed 2 Heating ..... on

Table D1: TopVent® THC operating modes

3 Technical data

3.1 Type code

THC - 6 A C ...

Unit type
TopVent® THC

Unit size
6 or 9

Heating section
A with coil type A
B with coil type B
C with coil type C

Cooling section
C with coil type C
D with coil type D

Further options

Table D2: Type code

3.2 Application limits

Extract air temperature		max.	°C	50
Moisture content of extract air		max.	g/kg	15
Supply air temperature		max.	°C	60
Temperature of the heating medium [1]		max.	°C	90
Pressure of the heating medium		max.	kPa	800
Air flow rate	Size 6:	min.	m³/h	3100
	Size 9:	min.	m³/h	5000
Condensate quantity	Size 6:	max.	kg/h	90
	Size 9:	max.	kg/h	150
The units cannot be used in: ■ Damp locations ■ Places with a corrosive or aggressive environment ■ Spaces with a large amount of dust ■ Areas where there is danger of explosion				
[1] Design for higher temperatures on request				

Table D3: Application limits

3.3 Electrical connection

Unit type		THC-6	THC-9
Supply voltage	VAC	3 × 400	3 × 400
Permitted voltage tolerance	%	± 5	± 5
Frequency	Hz	50	50
Connected load	kW	1.8	3.6
Current consumption max.	A	3.0	5.9
Series fuse	A	13	13
Degree of protection	-	IP54	IP54

Table D4: Electrical connection

3.4 Air flow rate

Unit type		THC-6	THC-9
Nominal air flow rate	m³/h	6000	9000
Floor area covered			
■ for applications with higher comfort requirements (e.g. production halls, assembly halls, sports halls)	m²	537	946
■ for applications with low comfort requirements (e.g. warehouses, logistics centres)	m²	953	1674

Table D5: Air flow rate

3.5 Sound level

Unit type			THC-6CC	THC-9CC
Sound pressure level (at a distance of 5 m) [1]		dB(A)	60	59
Total sound power level		dB(A)	82	81
Octave sound power level	63 Hz	dB	80	81
	125 Hz	dB	82	85
	250 Hz	dB	89	79
	500 Hz	dB	78	78
	1000 Hz	dB	76	76
	2000 Hz	dB	73	73
	4000 Hz	dB	67	66
	8000 Hz	dB	58	56

[1] with a hemispherical radiation pattern in a low-reflection room

Table D6: Sound level

D

3.6 Heat output

Heating medium temperature			80/60 °C					60/40 °C				
Size	Type	t_{room}	Q	H_{max}	t_S	Δp_W	m_W	Q	H_{max}	t_S	Δp_W	m_W
		°C	kW	m	°C	kPa	l/h	kW	m	°C	kPa	l/h
THC-6	A	16	32.8	13.4	34.2	7	1410	18.8	16.8	27.3	2	807
		20	30.3	14.0	37.0	6	1301	16.2	17.9	30.0	2	697
	B	16	47.0	11.6	41.3	13	2020	26.9	14.6	31.3	4	1157
		20	43.4	12.0	43.5	11	1864	23.3	15.5	33.5	3	1001
	C	16	76.0	9.4	55.6	18	3267	45.0	11.8	40.3	6	1935
		20	70.3	9.8	56.8	16	3022	39.3	12.5	41.5	5	1690
THC-9	A	16	55.5	13.6	36.3	8	2386	31.7	17.0	28.5	3	1364
		20	51.2	14.1	38.9	7	2201	27.4	18.1	31.1	2	1179
	B	16	71.2	12.2	41.5	12	3060	40.6	15.4	31.4	4	1746
		20	65.7	12.7	43.7	10	2823	35.1	16.5	33.6	3	1509
	C	16	117.9	9.8	56.9	18	5066	69.9	12.3	41.1	6	3003
		20	109.1	10.2	58.0	15	4686	61.0	13.1	42.1	5	2622

Legend:
- Type = Type of coil
- t_{room} = Room air temperature
- Q = Heat output
- H_{max} = Maximum mounting height
- t_S = Supply air temperature
- Δp_W = Water pressure drop
- m_W = Water quantity

Reference:
- At room air temperature 16 °C: extract air temperature 18 °C
- At room air temperature 20 °C: extract air temperature 22 °C

Table D7: Heat output

3.7 Cooling capacity

Cooling medium temperature				6/12 °C						8/14 °C					
Size	Type	t_{room}	RH_{room}	Q_{sen}	Q_{tot}	t_S	Δp_W	m_W	m_C	Q_{sen}	Q_{tot}	t_S	Δp_W	m_W	m_C
		°C	%	kW	kW	°C	kPa	l/h	kg/h	kW	kW	°C	kPa	l/h	kg/h
THC-6	C	22	50	20.4	20.4	13.9	15	2925	0.0	20.4	20.4	13.9	15	2925	0.0
			70	18.5	27.7	14.9	28	3960	13.5	16.0	21.4	16.1	17	3064	7.9
		26	50	25.2	31.1	15.5	36	4448	8.6	22.7	24.8	16.7	23	3552	3.0
			70	23.2	43.7	16.5	71	6263	30.2	20.8	37.5	17.7	52	5367	24.6
THC-9	C	22	50	31.4	31.4	13.6	15	4496	0.0	31.4	31.4	13.6	15	4496	0.0
			70	28.4	44.7	14.6	31	6401	23.9	24.6	28.2	15.9	12	4031	5.2
		26	50	38.8	49.9	15.2	38	7149	16.3	35.0	35.0	16.4	19	5013	0.0
			70	35.9	69.8	16.2	75	9989	49.8	32.0	53.2	17.4	44	7619	31.1
	D	22	50	37.1	37.1	11.8	13	5307	0.0	37.1	37.1	11.8	13	5307	0.0
			70	34.6	56.7	12.6	30	8118	32.5	29.7	45.1	14.2	19	6459	22.6
		26	50	46.4	62.4	12.7	36	8941	23.5	41.6	50.9	14.3	24	7282	13.6
			70	43.9	87.4	13.5	70	12513	63.9	39.1	75.8	15.1	53	10854	54.0

Legend:
- Type = Type of coil
- t_{room} = Room air temperature
- RH_{room} = Relative humidity of the room air
- Q_{sen} = Sensible cooling capacity
- Q_{tot} = Total cooling capacity
- t_S = Supply air temperature
- Δp_W = Water pressure drop
- m_W = Water quantity
- m_C = Condensate quantity

Reference:
- At room air temperature 22 °C: extract air temperature 24 °C
- At room air temperature 26 °C: extract air temperature 28 °C

Table D8: Cooling capacity

3.8 Product information according to ErP

Model	TopVent® THC									Unit
	6-AC	6-BC	6-CC	9-AC	9-BC	9-CC	9-AD	9-BD	9-CD	
Cooling capacity (sensible) ($P_{rated,c}$)	26.5	26.5	26.5	41.0	41.0	41.0	48.6	48.6	48.6	kW
Cooling capacity (latent) ($P_{rated,c}$)	5.6	5.6	5.6	7.3	7.3	7.3	15.2	15.2	15.2	kW
Heating capacity ($P_{rated,h}$)	13.2	18.9	29.8	22.6	28.5	46.2	22.6	28.5	46.2	kW
Total electric power input (P_{elec})	0.99	1.02	1.13	1.32	1.37	1.50	1.44	1.49	1.63	kW
Sound power level (L_{WA})	81	82	82	80	80	81	80	81	81	dB
Contact	Hoval Aktiengesellschaft Austrasse 70, 9490 Vaduz, Liechtenstein www.hoval.com									

Table D9: Product information according to Commission Regulation (EU) 2016/2281, Table 13

D

3.9 Dimensions and weights

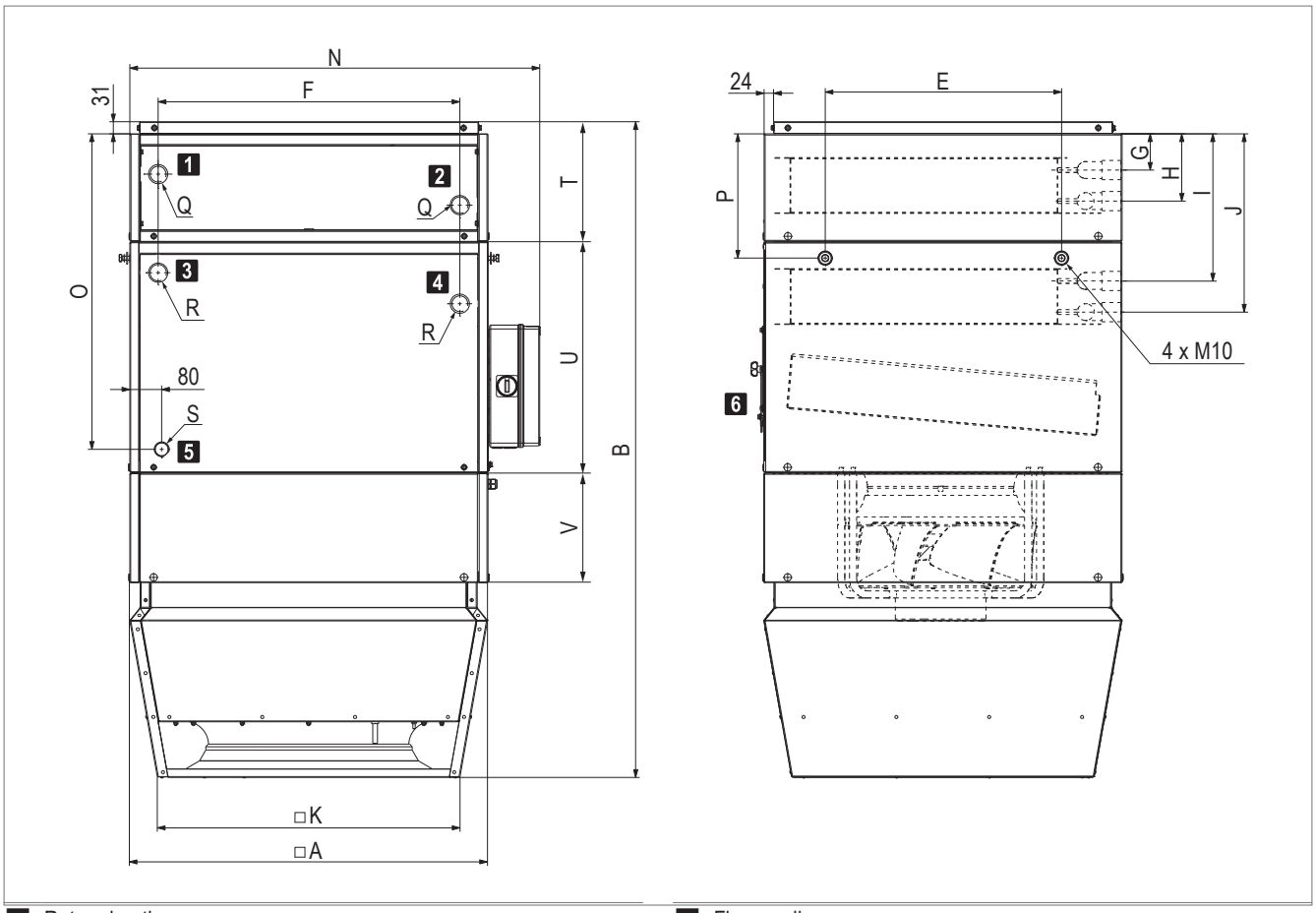

1	Return heating	4	Flow cooling
2	Flow heating	5	Condensate connection
3	Return cooling	6	Access panel, condensate separator

Fig. D4: TopVent® THC dimensional drawing

Unit size		THC-6			THC-9			THC-9		
Coil type		AC	BC	CC	AC	BC	CC	AD	BD	CD
A	mm	900			1100			1100		
B	mm	1647			1765			1765		
E	mm	594			846			846		
F	mm	758			882			882		
G	mm	101			111			111		
H	mm	179			189			189		
I	mm	349			395			386		
J	mm	427			473			481		
K	mm	760			935			935		
N	mm	1030			1230			1230		
O	mm	792			860			860		
P	mm	312			342			342		
T	mm	270			300			300		
U	mm	579			615			615		
V	mm	257			245			245		
Q	"	Rp 1¼ (internal)			Rp 1½ (internal)			Rp 1½ (internal)		
R	"	Rp 1¼ (internal)			Rp 1½ (internal)			Rp 2 (internal)		
S	"	G 1 (external)			G 1 (external)			G 1 (external)		
Water content of heating coil	l	4.6	4.6	7.9	7.4	7.4	12.4	7.4	7.4	12.4
Water content of cooling coil	l	7.9	7.9	7.9	12.4	12.4	12.4	19.2	19.2	19.2
Weight	kg	226	226	233	318	318	329	329	329	340

Table D10: TopVent® THC dimensions and weights

D

4 Specification texts

4.1 TopVent® THC

Recirculation unit for heating and cooling rooms up to 25 m in height with central heat and cold supply (4-pipe system); equipped with highly efficient air distributor.

The unit consists of the following components:
- Fan unit
- Heating section
- Cooling section
- Air-Injector
- Unit control box
- Optional components

The TopVent® THC unit complies with all the requirements of the Ecodesign Regulation (EU) 2024/1781. It is a system of the “fan coil unit” type, provided for in Commission Regulation (EU) 2016/2281.

Fan unit

Configured as radial fan with high-efficiency EC motor, backwards-curved, 3D contoured blades and free-running rotor made of a high-performance composite material, aerodynamically optimised inflow nozzle, low-noise, with integrated overload protection.

Heating section

Housing made of magnesium zinc sheet, air-tight, flame retardant, hygienic and easy to maintain because of ageing-resistant, silicone-free sealing materials.
The heating section contains:
- The highly efficient heating coil consisting of seamless copper pipes with pressed-on, optimised and profiled aluminium fins and manifolds made of copper; for connection to the hot water supply

Cooling section

Housing made of magnesium zinc sheet, air-tight, flame retardant, hygienic and easy to maintain because of ageing-resistant, silicone-free sealing materials, internally insulated with close-pored polyurethane.
The cooling section contains:
- The highly efficient cooling coil consisting of seamless copper pipes with pressed-on, optimised and profiled aluminium fins and manifolds made of copper; for connection to the cold water supply
- The pull-out condensate separator with collecting channel, made of high-quality corrosion-resistant material, with a downslope in all directions for rapid draining
- The condensate trap for connecting to a condensate drain (supplied)

Air-Injector

Housing made of magnesium zinc sheet, air-tight, flame retardant, hygienic and easy to maintain because of ageing-resistant, silicone-free sealing materials, internally insulated with closed-cell polyethylene foam, with:
- Vortex air distributor with concentric outlet nozzle, adjustable vanes and integrated absorber hood
- Actuator for infinitely variable adjustment of the air distribution from vertical to horizontal
  - for draught-free air distribution in the hall under changing operating conditions
  - for the rapid and large-area reduction of temperature stratification in the room through induction of secondary air and strong mixing of the room air with supply air
- Supply air temperature sensor

Unit control box

Control box fitted at the side of the unit for connection of the power supply and housing the control components that facilitate energy-optimised operation, controlled by the control system TopTronic® C. Plastic casing, degree of protection IP56. The following components are installed:
- Isolation switch
- Circuit board with all required electrical components, unit controller (clipped on) as well as connection terminals for the following external connections:
  - Heating/cooling valve
  - Heating/cooling pump
  - Return temperature sensor
  - Condensate pump
  - Door contact

The circuit board is fitted with push-in terminals facilitating easy installation of the connection cables. All components in the unit control box as well as sensors and actuators in the unit are fully factory-wired.
Power supply and bus connection to be installed on site.

Options for the unit

Suspension set
For ceiling installation of the unit consisting of 4 pairs U-profiles made of magnesium zinc sheet, height-adjustable to 1300 mm.

Filter box
Housing made of magnesium zinc sheet with 2 ISO coarse 60% bag filters (G4), with differential pressure switch for filter monitoring, factory-wired to the circuit board in the unit control box.

Flat filter box
Housing made of magnesium zinc sheet with 4 pleated ISO coarse 60% cell filters (G4), with differential pressure switch for filter monitoring, factory-wired to the circuit board in the unit control box.

Standard paint finish
Exterior painting in Hoval red (RAL 3000), including optional components and suspension set.

Paint finish as desired
Exterior painting of the unit in choice of RAL colour, including optional components and suspension set.

Recirculation silencer
As an attachment to the unit, made of magnesium zinc sheet, lined with sound insulation matting, insertion attenuation 3 dB.

Hydraulic assembly diverting system
Prefabricated assembly for hydraulic diverting system, consisting of mixing valve, regulating valve, ball valve, automatic air vent and screw connections for connection to the unit and to the distributor circuit; mixing valve with plug-in connection, sized for the coil in the unit and the Hoval TopTronic® C control system.

Mixing valve
Mixing valve with modulating rotary actuator and plug-in connection, sized for the coil in the unit.

Condensate pump
Consisting of a centrifugal pump and a drip tray, max. delivery rate of 150 l/h with a delivery head of 3 m. Condensate pump with connection cable enclosed.

Pump control for mixing or injection system
Electrical components for controlling a mixing or injection circuit in the load circuit, factory-installed in the unit control box.

4.2 TopTronic® C – System control

Zone-based control system for the energy-optimised operation of decentralised Hoval indoor climate systems. Maximum system size per system bus: 64 control zones with up to 10 supply and extract air handling units or supply air units and 10 recirculation units each.

Zone allocation
Configured in advance for the customer at the factory:

	Room designation	Unit type
Zone 1:	_____	_____
Zone 2:	_____	_____
…		

System structure
- Zone control panel made of coated sheet steel (light grey RAL 7035), … x … x … mm, with:
  - System operator terminal
  - Fresh air temperature sensor
  - 1 zone controller and 1 room temperature sensor per zone (expandable to up to 4 room temperature sensors per zone)
  - Safety relay
  - Electrical cabinet internally pre-wired, all components routed to terminals
- Zone bus: as serial bus for communication with all controllers in one control zone, with robust bus protocol via shielded, twisted bus cable (provided by the client)
- Unit controller: installed in the particular indoor climate unit, works autonomously according to the specifications of the zone controller
- Heating/cooling demand per zone with feedback monitoring

Functions, standard
- Zone-based autonomous room control. Temperature and ventilation control separately adjustable for each zone
- Room temperature control via room-supply air cascade by means of energy-optimised double sequence control with priority circuit for energy recovery (supply and extract air handling units)
- Intelligent automatic heating to reach the desired room temperature at the switching time
- 5 adjustable room temperature set values per zone:
  - Cooling protection (lower setpoint in Standby)
  - Overheating protection (upper setpoint in Standby)
  - Room set value winter
  - Room set value summer
  - Night cooling set value (free cooling) (supply and extract air handling units, supply air units)
- Destratification mode for even temperature distribution

- Main operating modes of supply and extract air handling units:
  VE .... Ventilation, infinitely variably adjustment
  AQ.... Air quality, automatic control with Hoval combination sensor (option), optional reference variable:
  – CO_2 or VOC
  – Air humidity (optimised dehumidification mode)
  REC . Recirculation, infinitely variably adjustment
  DES.. Destratification
  EA .... Exhaust air, infinitely variably adjustment
  SA .... Supply air, infinitely variably adjustment
  ST .... Standby

- Main operating modes of supply air units:
  REC . Recirculation, infinitely variably adjustment
  DES.. Destratification
  SA .... Supply air, infinitely variably adjustment
  With Hoval combination sensor (option) also demand-driven control of the fresh air ratio, optional reference variable CO_2 or VOC
  ST .... Standby

- Main operating modes of recirculation units:
  REC . Recirculation, infinitely variably adjustment
  DES.. Destratification
  ST .... Standby

- Forced heating (construction site heating) can be activated on each device before completion of the overall system (activation by Hoval service technician)
- Control of draught-free air distribution with the Hoval Air-Injector: the discharge direction is adjusted infinitely variably and automatically according to the respective operating condition and the existing temperatures (heating/cooling).

Operation

- TopTronic® C-ST system operator terminal: touch panel for visualisation and control of all Hoval indoor climate units registered on the bus

Options for operation

- Activation of the system operator terminal for VNC access, for visualisation on customer's PC
- TopTronic® C-ZT as zone operator terminal: for simple on-site operation of a control zone
- Manual operating selector switches
- Manual operating selector buttons
- Operating of the units via building management system via standardised interfaces:
  – BACnet
  – Modbus IP
  – Modbus RTU

Alarms, protection

- Central alarm management with registration of all alarms (timestamp, priority, status) in an alarm list and alarm memory of the last 50 alarms; forwarding via e-mail can be set in the parameters.
- If there is a failure of communication, bus stations, sensor systems or supply media, each part of the system transitions to a protection mode which safeguards operation.
- A maintenance mode implemented in the control algorithm for testing all physical data points and alarms guarantees high reliability.
- Pre-programmed data points retrievable via logger function for 1 year

Options for the zone control panel

- Alarm lamp
- Socket

Per zone:

- The change-over between heating and cooling can be either automatic or manual
  – Cooling lock switch for automatic changeover
  – Heating/cooling switch for manual changeover
- Additional room temperature sensors (max. 3)
- Combination sensor room air quality, temperature and humidity
- Combination sensor fresh air temperature and humidity
- Transfer of actual values from external systems (0-10 V; 4-20 mA)
- Transfer of setpoints from external systems (2-10 V; 4-20 mA)
- Load shedding input
- Signal for external extract air fan
- Operating selector switches on terminal
- Operating selector button on terminal
- Control of distributor pump, incl. power supply
- Control box TV | TW Pro

Power distribution:

- Circuit breakers and output terminals for Hoval indoor climate units
- Safety relay (4-pin)

4.3 TopTronic® C – Single zone control panel

Control system for the energy-optimised operation of decentralised Hoval indoor climate systems, standardised package solution for 1 single control zone, expandable with add-on zone control panels. Maximum system size per system bus: 64 control zones with up to 10 supply and extract air handling units or supply air units and 10 recirculation units each.

System structure

- Single zone control panel, designed as compact cabinet for wall installation, made of coated sheet steel (light grey RAL 7035), 380 × 300 × 210 mm, with:
  - System operator terminal
  - Fresh air temperature sensor
  - Zone controller
  - 1 Room temperature sensor (expandable to up to 4 room temperature sensors)
  - Safety relay
  - Electrical cabinet internally pre-wired, all components routed to terminals
- Zone bus: as serial bus for communication with all controllers in one control zone, with robust bus protocol via shielded, twisted bus cable (provided by the client)
- Unit controller: installed in the particular indoor climate unit, works autonomously according to the specifications of the zone controller
- Circuit board with external connections for:
  - Power supply
  - Zone bus
  - Room temperature sensors (max. 4)
  - Fresh air temperature sensor
  - Combination sensor room air quality, temperature and humidity
  - Collective alarm
  - Forced off
  - Heating demand
  - Setpoint heating demand
  - Fault heat supply
  - Cooling demand
  - Fault cold supply
  - External enabling heating/cooling (for automatic changeover)
  - External setting heating/cooling (for manual changeover)
  - Changeover valves heating/cooling
  - External setpoint fresh air ratio
  - Operating selector switch on terminal (digital)
  - Operating selector button on terminal

Functions, standard

- Room temperature control via sequential control of the coils
- Room temperature control via room-supply air cascade by means of energy-optimised double sequence control with priority circuit for energy recovery (supply and extract air handling units)
- Intelligent automatic heating to reach the desired room temperature at the switching time
- 5 adjustable room temperature set values per zone:
  - Cooling protection (lower setpoint in Standby)
  - Overheating protection (upper setpoint in Standby)
  - Room set value winter
  - Room set value summer
  - Night cooling set value (free cooling) (supply and extract air handling units, supply air units)
- Destratification mode for even temperature distribution

- Main operating modes of supply and extract air handling units:
  VE .... Ventilation, infinitely variably adjustment
  AQ.... Air quality, automatic control with Hoval combination sensor (option), optional reference variable CO_2 or VOC
  REC . Recirculation, infinitely variably adjustment
  DES.. Destratification
  EA .... Exhaust air, infinitely variably adjustment
  SA .... Supply air, infinitely variably adjustment
  ST .... Standby

- Main operating modes of supply air units:
  REC . Recirculation, infinitely variably adjustment
  DES.. Destratification
  SA .... Supply air, infinitely variably adjustment
  With Hoval combination sensor (option) also demand-driven control of the fresh air ratio, optional reference variable CO_2 or VOC
  ST .... Standby

- Main operating modes of recirculation units:
  REC . Recirculation, infinitely variably adjustment
  DES.. Destratification
  ST .... Standby

- Forced heating (construction site heating) can be activated on each device before completion of the overall system (activation by Hoval service technician)
- Control of draught-free air distribution with the Hoval Air-Injector: the discharge direction is adjusted infinitely variably and automatically according to the respective operating condition and the existing temperatures (heating/cooling).

Operation

- TopTronic® C-ST system operator terminal: touch panel for visualisation and control of all Hoval indoor climate units registered on the bus

D

Options for operation

- Activation of the system operator terminal for VNC access, for visualisation on customer's PC
- Operating of the units via building management system via standardised interfaces:
  - BACnet
  - Modbus IP
  - Modbus RTU

Alarms, protection

- Central alarm management with registration of all alarms (timestamp, priority, status) in an alarm list and alarm memory of the last 50 alarms; forwarding via e-mail can be set in the parameters.
- If there is a failure of communication, bus participants, sensor systems or supply media, each part of the system transitions to a protection mode which safeguards operation.
- A maintenance mode implemented in the control algorithm for testing all physical data points and alarms guarantees high reliability.
- Pre-programmed data points retrievable via logger function for 1 year

Options for the single zone control panel

- Add-on zone control panel, designed as compact cabinet for wall installation, made of coated sheet steel (light grey RAL 7035), 380 × 300 × 210 mm, with:
  - Zone controller
  - 1 Room temperature sensor (expandable to up to 4 room temperature sensors)
  - Safety relay
  - Electrical cabinet internally pre-wired, all components routed to terminals
- Additional room temperature sensors (max. 3)
- Combination sensor room air quality, temperature and humidity
- Signal for external extract air fan
- TV|TW Pro control box

4.4 HovalSupervisor cloud TopTronic® C

(Terms of use according to www.hoval.com/hsc are accepted when ordered.)

HovalSupervisor cloud TopTronic® C

Remote access, visualisation, historization, trends, evaluations and alarming for Hoval indoor climate systems with TopTronic® C control

- Project-specific system engineering
- Visualisation of the system statuses, error messages, actual and nominal values of the entire plant system
- Graphical display of the entire plant control system, in order to complete an analysis of sequences and subsequently to be able to perform an optimisation
- Integrated continuous line recorder for a period of 3 years
- Integrated alarm management
- Multi-user system: simultaneous access, 2 users included per plant
- Max. 300 data points historicized
- Max. 10 control zones

Consisting of:

- Project-specific engineering of the visualisation as described above
- Industrial router for connecting the TopTronic® C control system
  - Metal casing installed in the zone control panel
  - Without SIM card, free choice of phone network
  - Router configuration possible via web server
  - Network connections:
    2 x 10/100 Mbit Ethernet
    2 x SIM card slot
  - SMA connections:
    1 x WLAN
    2 x mobile data via integrated antenna
  - Power supply for industrial router installed in zone control panel

HovalSupervisor cloud TopTronic® C subscription

Subscription for use of the HovalSupervisor cloud for visualisation of a TopTronic® C system

- 1 year term (subscription billed once a year)
- Use of the HovalSupervisor cloud and storage of the data in the cloud
- Paid support during business hours (only for the software, not for the system)
- The respective valid conditions of use and the service level agreement (SLA) apply, which can be retrieved online.

Options for HovalSupervisor cloud

- Antenna to improve mobile data reception in conjunction with the HovalSupervisor cloud TopTronic® C
  - Antenna with mounting bracket for on-site installation outside the TopTronic® C zone control panel
  - 2G/3G/4G-LTE/5G-ready
  - SMA port available on the antenna
- Antenna extension cable for connecting the antenna in conjunction with the HovalSupervisor cloud
  - SMA port
  - Double shielded
  - Length: 5 m

Hoval

TopVent® MH

Supply air units for ventilating and heating spaces up to 25 m in height with central heat supply

1 Use 56
2 Construction and operation 56
3 Technical data 60
4 Specification texts 66

E

1 Use

1.1 Intended use

TopVent® MH units are supply air units for ventilating and heating spaces up to 25 m in height with central heat supply. They have the following functions:

- Heating (with connection to a hot water supply)
- Fresh air supply
- Mixed air operation
- Recirculation operation
- Air distribution and destratification with adjustable Air-Injector
- Air filtration

The TopVent® MH unit complies with all the requirements of the Ecodesign Regulation (EU) 2024/1781. It is a system of the “fan coil unit” type, provided for in Commission Regulation (EU) 2016/2281.

The Hoval TopTronic® C integrated control system ensures energy-efficient, demand-based operation of Hoval indoor climate systems.

Intended use also includes compliance with the operating instructions. Any usage over and above this use is considered to be not as intended. The manufacturer can accept no liability for damage resulting from improper use.

1.2 User group

The units are only allowed to be installed, operated and maintained by authorised and instructed personnel who are well acquainted with the units and are informed about possible dangers.

2 Construction and operation

2.1 Construction

The TopVent® MH unit consists of the following components:

- Mixed air box with fresh air and recirculation dampers linked to move in opposite directions, equipped with actuator with spring return
- Filter box:
  For air filtration, 2 pocket filters ISO Coarse 60% are installed.
- Heating section:
  – Heating coil for heating the supply air with hot water
- Fan unit:
  – Radial fan with energy-saving EC motor
- Air-Injector:
  The Air-Injector is a patented, infinitely variable vortex air distributor for the draught-free introduction of air into the hall under changing operating conditions.

As part of the TopTronic® C control system, the unit control box is an integral component.

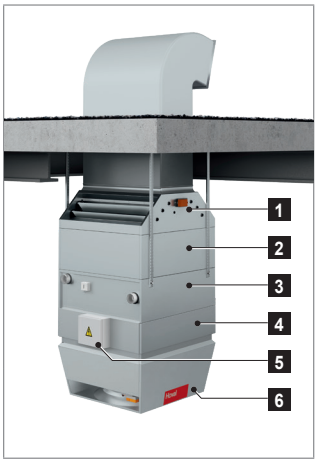

1	Mixed air box
2	Filter box
3	Heating section
4	Fan unit
5	Unit control box
6	Air-Injector

Fig. E1:
TopVent® MH components

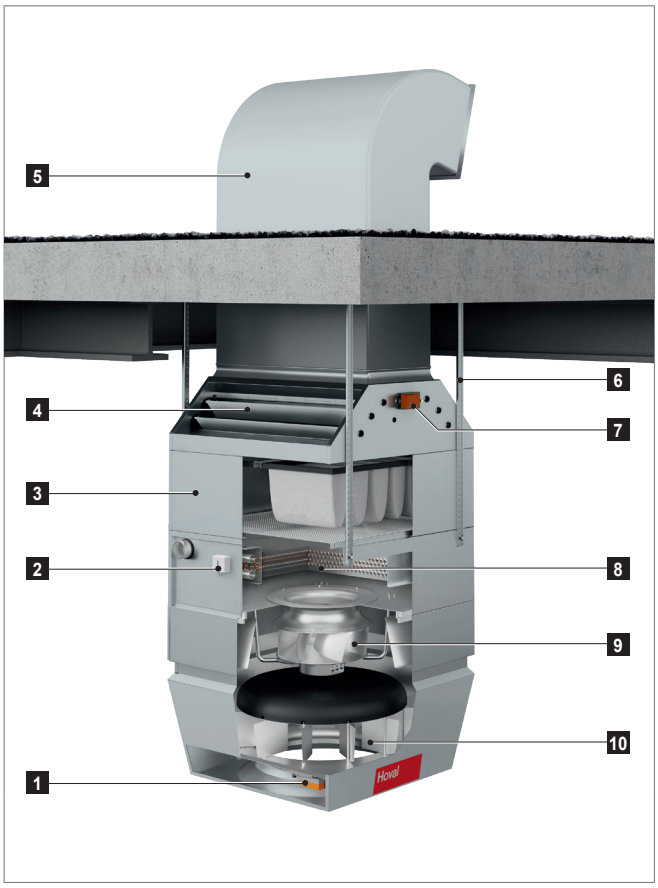

1	Actuator Air-Injector
2	Frost controller
3	Filter box
4	Mixed air box
5	Fresh air duct (on-site)
6	Suspension set
7	Fresh air damper actuator
8	Fan
9	Heating coil
10	Air-Injector

Fig. E2: TopVent® MH construction

2.2 Function diagram

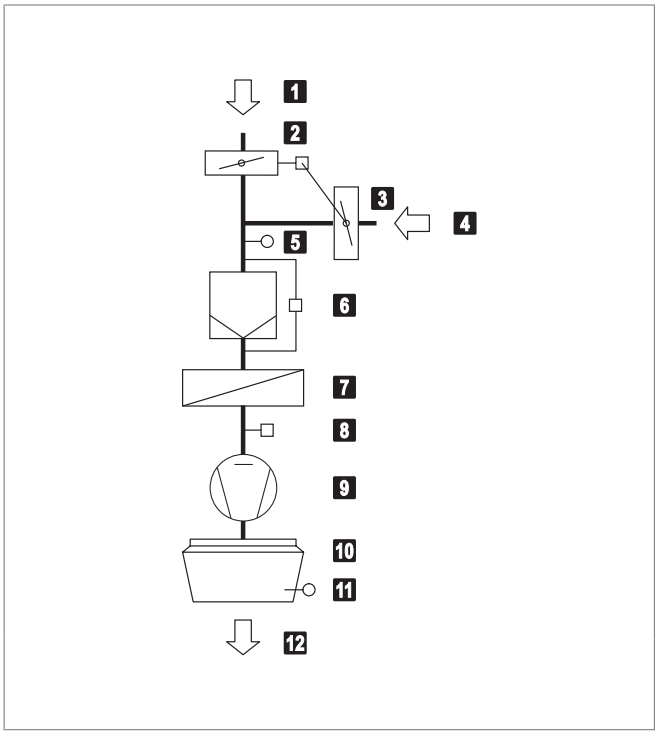

1	Fresh air
2	Fresh air damper with actuator
3	Recirculation damper (opposed to the fresh air damper)
4	Extract air
5	Mixed air temperature sensor
6	Air filter with differential pressure switch
7	Heating coil
8	Frost controller
9	Fan
10	Air-Injector with actuator
11	Supply air temperature sensor
12	Supply air

Fig. E3: TopVent® MH function diagram

2.3 Operating modes

The TopVent® MH operates in the following modes:
- Supply air speed 2
- Supply air speed 1
- Recirculation
- Recirculation speed 1
- Standby

The TopTronic® C control system regulates these operating modes automatically for each control zone in accordance with the specifications in the calendar. The following points also apply:
- The operating mode of a control zone can be switched over manually.
- Each TopVent® unit can operate individually in a local operating mode: Off, Supply air speed 2, Supply air speed 1, Recirculation, Recirculation speed 1

Code	Operating mode		Description
SA2	**Supply air speed 2** The fan runs at speed 2 (high air flow rate). The room temperature set value day is active. The unit blows fresh air into the room. The control of the fresh air ratio can be selected:		
	<u>Fixed fresh air ratio:</u> The unit operates continuously with the set fresh air ratio. The system controls the heating according to the heating demand.	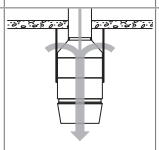	Fan ..... speed 2 Fresh air damper..... 10 % open [1)] Heating ..... 0-100 % [2)] [1)] Percentage is adjustable [2)] Depending on heat demand
	<u>Variable fresh air ratio:</u> ■ The system regulates the fresh air ratio depending on the temperature. The set fresh air ratio serves as a minimum value. If the temperature conditions permit, more fresh air is brought into the room and used for free heating or free cooling. Only when this potential is fully utilised is the heating switched on via the coil if required. ■ If a combination sensor for room air is installed (option), the system additionally controls the fresh air ratio depending on the air quality: – If there is no heat demand, the fresh air damper is opened 100% if the indoor air quality is too poor. – When the setpoint value for the CO_2 or VOC content of the room air is reached, the fresh air damper closes again to the set minimum value. **Notice** In order to save heating energy, the unit only operates with the set minimum fresh air rate when heat is required.		Fan ..... speed 2 Fresh air damper..... MIN-100 % open [1)] Heating ..... 0-100 % [2)] [1)] A minimum value can be set [2)] Depending on heat demand
SA1	**Supply air speed 1** The same as SA2, but the fan operates at speed 1 (low air flow rate)	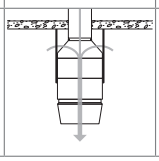	Fan ..... speed 1 Fresh air damper..... MIN-100 % open [1)] Heating ..... 0-100 % [1)] Fixed or variable (see above)

Code	Operating mode		Description
REC	**Recirculation** On/off-operation: If heating is required, the unit draws in room air, heats it and blows it back into the room. The room temperature set value day is active.	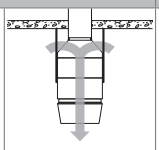	Fan ..... speed 1 / 2 [1)] Fresh air damper..... closed Heating ..... on [1)] [1)] Depending on heat demand
DES	■ Destratification: To avoid heat build-up under the ceiling, it may be appropriate to switch on the fan when there is no heat demand (either in permanent operation or in on/off operation depending on the temperature stratification, as desired).		Fan ..... speed 2 Fresh air damper..... closed Heating ..... off
REC1	**Recirculation speed 1** The same as REC, but the unit operates only at speed 1 (low air flow rate)	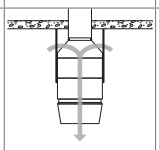	Fan ..... speed 1 Fresh air damper..... closed Heating ..... on [1)] [1)] Depending on heat demand
DES	■ Destratification: The same as for REC, but the unit operates only at speed 1		Fan ..... speed 1 Fresh air damper..... closed Heating ..... off
ST	**Standby** The unit is ready for operation; the following operating modes are activated if required:	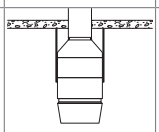	
CPR	■ Cooling protection: If the room temperature drops below the set value for cooling protection, the unit heats up the room in recirculation operation.	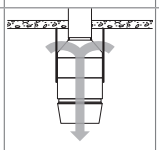	Fan ..... speed 2 Fresh air damper..... closed Heating ..... on
NCS	■ Night cooling: If the room temperature exceeds the set value for night cooling and the current fresh air temperature permits it, the unit blows cool fresh air into the room and extracts warmer room air.	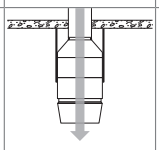	Fan ..... speed 2 Fresh air damper..... open Heating ..... off
L_OFF	**Off** (local operating mode) The unit is switched off; frost protection for the unit remains active.	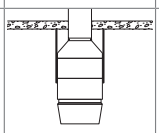	Fan ..... off Fresh air damper..... closed Heating ..... off
–	**Forced heating** The unit draws in room air, warms it and blows it back into the room. Forced heating can be activated and set as required by the Hoval service technician. For example, it is suitable for heating the hall before taking the control system into operation or if the controller fails during the heating period.	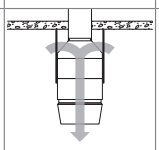	Fan ..... speed 2 [1)] Fresh air damper..... closed [1)] Heating ..... on [1)] [1)] Adjustable by the Hoval service technician

Table E1: TopVent® MH operating modes

E

3 Technical data

3.1 Type code

MH - 6 A - ...

Unit type
TopVent® MH

Unit size
6 or 9

Heating section
A with coil type A
B with coil type B
C with coil type C

Further options

Table E2: Type code

3.2 Application limits

Extract air temperature	max.	°C	50
Moisture content of extract air	max.	g/kg	15
Supply air temperature	max.	°C	60
Temperature of the heating medium [1]	max.	°C	90
Pressure of the heating medium	max.	kPa	800
The units cannot be used in: ■ Damp locations ■ Places with a corrosive or aggressive environment ■ Spaces with a large amount of dust ■ Areas where there is danger of explosion			
[1] Design for higher temperatures on request			

Table E3: Application limits

3.3 Electrical connection

Unit type		MH-6	MH-9
Supply voltage	VAC	3 × 400	3 × 400
Permitted voltage tolerance	%	± 5	± 5
Frequency	Hz	50	50
Connected load	kW	1.6	3.4
Current consumption max.	A	3.0	5.9
Series fuse	A	13	13
Degree of protection	-	IP54	IP54

Table E4: Electrical connection

3.4 Air flow rate

Unit type		MH-6	MH-9
Nominal air flow rate	m³/h	6000	9000
Floor area covered	m²	537	946

Table E5: TopVent® MH air flow rate

3.5 Sound level

Unit type			MH-6C	MH-9C
Sound pressure level (at a distance of 5 m) [1]		dB(A)	59	58
Total sound power level		dB(A)	81	80
Octave sound power level	63 Hz	dB	79	80
	125 Hz	dB	80	84
	250 Hz	dB	87	78
	500 Hz	dB	77	77
	1000 Hz	dB	74	75
	2000 Hz	dB	72	72
	4000 Hz	dB	66	65
	8000 Hz	dB	56	55

[1] with a hemispherical radiation pattern in a low-reflection room

Table E6: Sound level

3.6 Air filtration

Filter	Fresh air / Extract air
Class acc. to ISO 16890	ISO coarse 60 %
Class acc. to EN 779	G4
Factory setting of differential pressure switches	180 Pa

Table E7: Air filtration

3.7 Heat output

Heating medium temperature			80/60 °C					60/40 °C				
Size	Type	t_F	Q	H_{max}	t_S	Δp_W	m_W	Q	H_{max}	t_S	Δp_W	m_W
		°C	kW	m	°C	kPa	l/h	kW	m	°C	kPa	l/h
MH-6	A	−5	33.1	14.4	33.9	7	1424	19.1	18.8	27.0	2	820
		−15	33.8	14.7	33.2	8	1451	19.7	19.5	26.3	3	848
	B	−5	47.5	12.1	41.0	13	2040	27.4	15.7	31.1	4	1177
		−15	48.4	12.2	40.5	14	2079	28.3	16.1	30.5	5	1216
	C	−5	76.8	9.7	55.5	18	3297	45.7	12.3	40.1	7	1965
		−15	78.2	9.7	55.2	19	3358	47.2	12.4	39.9	7	2026
MH-9	A	−5	56.1	14.4	36.0	8	2409	32.3	18.8	28.2	3	1387
		−15	57.1	14.6	35.4	8	2455	33.4	19.4	27.5	3	1433
	B	−5	71.9	12.8	41.2	12	3090	41.3	16.7	31.1	4	1775
		−15	73.3	12.9	40.7	13	3149	42.7	17.0	30.6	4	1834
	C	−5	119.0	10.1	56.8	18	5113	71.0	12.9	40.9	7	3050
		−15	121.2	10.1	56.5	19	5208	73.2	12.9	40.7	7	3145

Legend:
- Type = Type of coil
- t_F = Fresh air temperature
- Q = Heat output
- H_{max} = Maximum mounting height
- t_S = Supply air temperature
- Δp_W = Water pressure drop
- m_W = Water quantity

Reference:
- Room air 18 °C, extract air 20 °C / 20 % rel. humidity
- Fresh air ratio 10 %

Table E8: Heat output

3.8 Product information according to ErP

Model	TopVent® MH						Unit
	6A	6B	6C	9A	9B	9C	
Cooling capacity (sensible) ($P_{rated,c}$)	–	–	–	–	–	–	kW
Cooling capacity (latent) ($P_{rated,c}$)	–	–	–	–	–	–	kW
Heating capacity ($P_{rated,h}$)	13.2	18.9	29.8	22.6	28.5	46.2	kW
Total electric power input (P_{elec})	0.86	0.88	0.99	1.22	1.25	1.35	kW
Sound power level (L_{WA})	80	80	81	79	79	80	dB
Contact	Hoval Aktiengesellschaft Austrasse 70, 9490 Vaduz, Liechtenstein www.hoval.com						

Table E9: Product information according to Commission Regulation (EU) 2016/2281, Table 13

E

3.9 Dimensions and weights

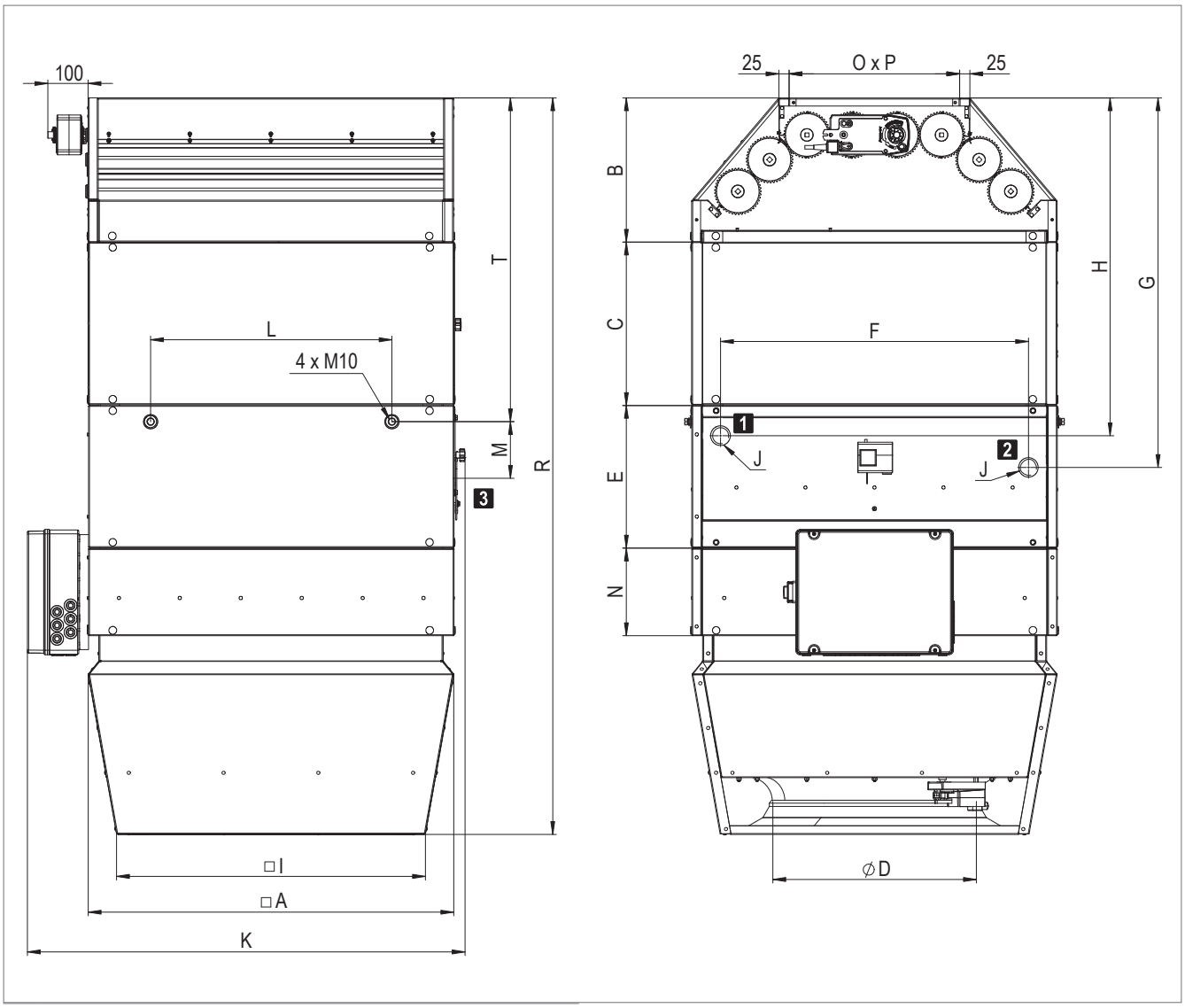

1	Return heating
2	Flow heating
3	Access panel, heating coil

Fig. E4: TopVent® MHC dimensional drawing

Unit size		MH-6			MH-9		
Coil type		A	B	C	A	B	C
A	mm	900			1100		
B	mm	355			360		
C	mm	400			400		
D	mm	500			630		
E	mm	350			377		
F	mm	758			882		
G	mm	910			920		
H	mm	832			840		
I	mm	760			935		
K	mm	1077			1277		
L	mm	594			846		
M	mm	140			174		
N	mm	215			247		
O × P	mm	420 × 850			500 × 1050		
R	mm	1813			1955		
T	mm	797			802		
J	"	Rp 1¼ (internal)			Rp 1½ (internal)		
Water content of heating coil	l	4.6	4.6	7.9	7.4	7.4	12.4
Weight	kg	186	186	193	265	265	276

Table E10: TopVent® MHC dimensions and weights

E

4 Specification texts

4.1 TopVent® MH

Supply air unit for ventilating and heating rooms up to 25 m in height with central heat supply, equipped with highly efficient air distributor.

The unit consists of the following components:
- Fan unit
- Heating section
- Air-Injector
- Filter box
- Mixed air box
- Unit control box
- Optional components

The TopVent® MH unit complies with all the requirements of the Ecodesign Regulation (EU) 2024/1781. It is a system of the “fan coil unit” type, provided for in Commission Regulation (EU) 2016/2281.

Fan unit

Configured as radial fan with high-efficiency EC motor, backwards-curved, 3D contoured blades and free-running rotor made of a high-performance composite material, aerodynamically optimised inflow nozzle, low-noise, with integrated overload protection.

Heating section

Housing made of magnesium zinc sheet, air-tight, flame retardant, hygienic and easy to maintain because of ageing-resistant, silicone-free sealing materials.
The heating section contains:
- The highly efficient heating coil consisting of seamless copper pipes with pressed-on, optimised and profiled aluminium fins and manifolds made of copper; for connection to the hot water supply

Air-Injector

Housing made of magnesium zinc sheet, air-tight, flame retardant, hygienic and easy to maintain because of ageing-resistant, silicone-free sealing materials, with:
- Vortex air distributor with concentric outlet nozzle, adjustable vanes and integrated absorber hood
- Actuator for infinitely variable adjustment of the air distribution from vertical to horizontal
  - for draught-free air distribution in the hall under changing operating conditions
  - for the rapid and large-area reduction of temperature stratification in the room through induction of secondary air and strong mixing of the room air with supply air
- Supply air temperature sensor

Filter box

Housing made of magnesium zinc sheet, internally insulated with closed-cell polyethylene foam, with 2 ISO coarse 60% bag filters (G4), with differential pressure switch for filter monitoring, factory-wired to the circuit board in the unit control box.

Mixed air box

Casing made of magnesium zinc sheet, internally insulated with closed-cell polyethylene foam, with fresh air damper and recirculation damper linked to move in opposite directions; includes actuator with spring return, factory-wired to the circuit board in the unit control box.

Unit control box

Control box fitted at the side of the unit for connection of the power supply and housing the control components that facilitate energy-optimised operation, controlled by the control system TopTronic® C. Plastic casing, degree of protection IP56. The following components are installed:
- Isolation switch
- Circuit board with all required electrical components, unit controller (clipped on) as well as connection terminals for the following external connections:
  - Heating valve
  - Heating pump
  - Return temperature sensor
  - Forced off

The circuit board is fitted with push-in terminals facilitating easy installation of the connection cables. All components in the unit control box as well as sensors and actuators in the unit are fully factory-wired.
Power supply and bus connection to be installed on site.

Options for the unit

Suspension set
For ceiling installation of the unit consisting of 4 pairs U-profiles made of magnesium zinc sheet, height-adjustable to 1300 mm.

Standard paint finish
Exterior painting in Hoval red (RAL 3000), including optional components and suspension set.

Paint finish as desired
Exterior painting of the unit in choice of RAL colour, including optional components and suspension set.

Hydraulic assembly diverting system
Prefabricated assembly for hydraulic diverting system, consisting of mixing valve, regulating valve, ball valve, automatic air vent and screw connections for connection to the unit and to the distributor circuit; mixing valve with plug-in connection, sized for the coil in the unit and the Hoval TopTronic® C control system.

Mixing valve
Mixing valve with modulating rotary actuator and plug-in connection, sized for the coil in the unit.
Pump control for mixing or injection system:
Electrical components for controlling a mixing or injection circuit in the load circuit, factory-installed in the unit control box.

Return temperature sensor
Temperature sensor for monitoring the heating medium.

4.2 TopTronic® C – System control

Zone-based control system for the energy-optimised operation of decentralised Hoval indoor climate systems. Maximum system size per system bus: 64 control zones with up to 10 supply and extract air handling units or supply air units and 10 recirculation units each.

Zone allocation
Configured in advance for the customer at the factory:

	Room designation	Unit type
Zone 1:	_____	_____
Zone 2:	_____	_____
…		

System structure
- Zone control panel made of coated sheet steel (light grey RAL 7035), … x … x … mm, with:
  - System operator terminal
  - Fresh air temperature sensor
  - 1 zone controller and 1 room temperature sensor per zone (expandable to up to 4 room temperature sensors per zone)
  - Safety relay
  - Electrical cabinet internally pre-wired, all components routed to terminals
- Zone bus: as serial bus for communication with all controllers in one control zone, with robust bus protocol via shielded, twisted bus cable (provided by the client)
- Unit controller: installed in the particular indoor climate unit, works autonomously according to the specifications of the zone controller
- Heating/cooling demand per zone with feedback monitoring

Functions, standard
- Zone-based autonomous room control. Temperature and ventilation control separately adjustable for each zone
- Room temperature control via room-supply air cascade by means of energy-optimised double sequence control with priority circuit for energy recovery (supply and extract air handling units)
- Intelligent automatic heating to reach the desired room temperature at the switching time
- 5 adjustable room temperature set values per zone:
  - Cooling protection (lower setpoint in Standby)
  - Overheating protection (upper setpoint in Standby)
  - Room set value winter
  - Room set value summer
  - Night cooling set value (free cooling) (supply and extract air handling units, supply air units)
- Destratification mode for even temperature distribution

- Main operating modes of supply and extract air handling units:
  VE .... Ventilation, infinitely variably adjustment
  AQ.... Air quality, automatic control with Hoval combination sensor (option), optional reference variable:
  – CO_2 or VOC
  – Air humidity (optimised dehumidification mode)
  REC . Recirculation, infinitely variably adjustment
  DES.. Destratification
  EA .... Exhaust air, infinitely variably adjustment
  SA .... Supply air, infinitely variably adjustment
  ST .... Standby

- Main operating modes of supply air units:
  REC . Recirculation, infinitely variably adjustment
  DES.. Destratification
  SA .... Supply air, infinitely variably adjustment
  With Hoval combination sensor (option) also demand-driven control of the fresh air ratio, optional reference variable CO_2 or VOC
  ST .... Standby

- Main operating modes of recirculation units:
  REC . Recirculation, infinitely variably adjustment
  DES.. Destratification
  ST .... Standby

- Forced heating (construction site heating) can be activated on each device before completion of the overall system (activation by Hoval service technician)
- Control of draught-free air distribution with the Hoval Air-Injector: the discharge direction is adjusted infinitely variably and automatically according to the respective operating condition and the existing temperatures (heating/cooling).

Operation

- TopTronic® C-ST system operator terminal: touch panel for visualisation and control of all Hoval indoor climate units registered on the bus

Options for operation

- Activation of the system operator terminal for VNC access, for visualisation on customer's PC
- TopTronic® C-ZT as zone operator terminal: for simple on-site operation of a control zone
- Manual operating selector switches
- Manual operating selector buttons
- Operating of the units via building management system via standardised interfaces:
  – BACnet
  – Modbus IP
  – Modbus RTU

Alarms, protection

- Central alarm management with registration of all alarms (timestamp, priority, status) in an alarm list and alarm memory of the last 50 alarms; forwarding via e-mail can be set in the parameters.
- If there is a failure of communication, bus stations, sensor systems or supply media, each part of the system transitions to a protection mode which safeguards operation.
- A maintenance mode implemented in the control algorithm for testing all physical data points and alarms guarantees high reliability.
- Pre-programmed data points retrievable via logger function for 1 year

Options for the zone control panel

- Alarm lamp
- Socket

Per zone:

- The change-over between heating and cooling can be either automatic or manual
  – Cooling lock switch for automatic changeover
  – Heating/cooling switch for manual changeover
- Additional room temperature sensors (max. 3)
- Combination sensor room air quality, temperature and humidity
- Combination sensor fresh air temperature and humidity
- Transfer of actual values from external systems (0-10 V; 4-20 mA)
- Transfer of setpoints from external systems (2-10 V; 4-20 mA)
- Load shedding input
- Signal for external extract air fan
- Operating selector switches on terminal
- Operating selector button on terminal
- Control of distributor pump, incl. power supply
- Control box TV | TW Pro

Power distribution:

- Circuit breakers and output terminals for Hoval indoor climate units
- Safety relay (4-pin)

4.3 TopTronic® C – Single zone control panel

Control system for the energy-optimised operation of decentralised Hoval indoor climate systems, standardised package solution for 1 single control zone, expandable with add-on zone control panels. Maximum system size per system bus: 64 control zones with up to 10 supply and extract air handling units or supply air units and 10 recirculation units each.

System structure

- Single zone control panel, designed as compact cabinet for wall installation, made of coated sheet steel (light grey RAL 7035), 380 × 300 × 210 mm, with:
  - System operator terminal
  - Fresh air temperature sensor
  - Zone controller
  - 1 Room temperature sensor (expandable to up to 4 room temperature sensors)
  - Safety relay
  - Electrical cabinet internally pre-wired, all components routed to terminals
- Zone bus: as serial bus for communication with all controllers in one control zone, with robust bus protocol via shielded, twisted bus cable (provided by the client)
- Unit controller: installed in the particular indoor climate unit, works autonomously according to the specifications of the zone controller
- Circuit board with external connections for:
  - Power supply
  - Zone bus
  - Room temperature sensors (max. 4)
  - Fresh air temperature sensor
  - Combination sensor room air quality, temperature and humidity
  - Collective alarm
  - Forced off
  - Heating demand
  - Setpoint heating demand
  - Fault heat supply
  - Cooling demand
  - Fault cold supply
  - External enabling heating/cooling (for automatic changeover)
  - External setting heating/cooling (for manual changeover)
  - Changeover valves heating/cooling
  - External setpoint fresh air ratio
  - Operating selector switch on terminal (digital)
  - Operating selector button on terminal

Functions, standard

- Room temperature control via sequential control of the coils
- Room temperature control via room-supply air cascade by means of energy-optimised double sequence control with priority circuit for energy recovery (supply and extract air handling units)
- Intelligent automatic heating to reach the desired room temperature at the switching time
- 5 adjustable room temperature set values per zone:
  - Cooling protection (lower setpoint in Standby)
  - Overheating protection (upper setpoint in Standby)
  - Room set value winter
  - Room set value summer
  - Night cooling set value (free cooling) (supply and extract air handling units, supply air units)
- Destratification mode for even temperature distribution

- Main operating modes of supply and extract air handling units:
  VE .... Ventilation, infinitely variably adjustment
  AQ.... Air quality, automatic control with Hoval combination sensor (option), optional reference variable CO_2 or VOC
  REC . Recirculation, infinitely variably adjustment
  DES.. Destratification
  EA .... Exhaust air, infinitely variably adjustment
  SA .... Supply air, infinitely variably adjustment
  ST .... Standby

- Main operating modes of supply air units:
  REC . Recirculation, infinitely variably adjustment
  DES.. Destratification
  SA .... Supply air, infinitely variably adjustment
  With Hoval combination sensor (option) also demand-driven control of the fresh air ratio, optional reference variable CO_2 or VOC
  ST .... Standby

- Main operating modes of recirculation units:
  REC . Recirculation, infinitely variably adjustment
  DES.. Destratification
  ST .... Standby

- Forced heating (construction site heating) can be activated on each device before completion of the overall system (activation by Hoval service technician)
- Control of draught-free air distribution with the Hoval Air-Injector: the discharge direction is adjusted infinitely variably and automatically according to the respective operating condition and the existing temperatures (heating/cooling).

Operation

- TopTronic® C-ST system operator terminal: touch panel for visualisation and control of all Hoval indoor climate units registered on the bus

E

Options for operation

- Activation of the system operator terminal for VNC access, for visualisation on customer's PC
- Operating of the units via building management system via standardised interfaces:
  - BACnet
  - Modbus IP
  - Modbus RTU

Alarms, protection

- Central alarm management with registration of all alarms (timestamp, priority, status) in an alarm list and alarm memory of the last 50 alarms; forwarding via e-mail can be set in the parameters.
- If there is a failure of communication, bus participants, sensor systems or supply media, each part of the system transitions to a protection mode which safeguards operation.
- A maintenance mode implemented in the control algorithm for testing all physical data points and alarms guarantees high reliability.
- Pre-programmed data points retrievable via logger function for 1 year

Options for the single zone control panel

- Add-on zone control panel, designed as compact cabinet for wall installation, made of coated sheet steel (light grey RAL 7035), 380 × 300 × 210 mm, with:
  - Zone controller
  - 1 Room temperature sensor (expandable to up to 4 room temperature sensors)
  - Safety relay
  - Electrical cabinet internally pre-wired, all components routed to terminals
- Additional room temperature sensors (max. 3)
- Combination sensor room air quality, temperature and humidity
- Signal for external extract air fan
- TV|TW Pro control box

4.4 HovalSupervisor cloud TopTronic® C

(Terms of use according to www.hoval.com/hsc are accepted when ordered.)

HovalSupervisor cloud TopTronic® C

Remote access, visualisation, historization, trends, evaluations and alarming for Hoval indoor climate systems with TopTronic® C control

- Project-specific system engineering
- Visualisation of the system statuses, error messages, actual and nominal values of the entire plant system
- Graphical display of the entire plant control system, in order to complete an analysis of sequences and subsequently to be able to perform an optimisation
- Integrated continuous line recorder for a period of 3 years
- Integrated alarm management
- Multi-user system: simultaneous access, 2 users included per plant
- Max. 300 data points historicized
- Max. 10 control zones

Consisting of:

- Project-specific engineering of the visualisation as described above
- Industrial router for connecting the TopTronic® C control system
  - Metal casing installed in the zone control panel
  - Without SIM card, free choice of phone network
  - Router configuration possible via web server
  - Network connections:
    2 x 10/100 Mbit Ethernet
    2 x SIM card slot
  - SMA connections:
    1 x WLAN
    2 x mobile data via integrated antenna
  - Power supply for industrial router installed in zone control panel

HovalSupervisor cloud TopTronic® C subscription

Subscription for use of the HovalSupervisor cloud for visualisation of a TopTronic® C system

- 1 year term (subscription billed once a year)
- Use of the HovalSupervisor cloud and storage of the data in the cloud
- Paid support during business hours (only for the software, not for the system)
- The respective valid conditions of use and the service level agreement (SLA) apply, which can be retrieved online.

Options for HovalSupervisor cloud

- Antenna to improve mobile data reception in conjunction with the HovalSupervisor cloud TopTronic® C
  - Antenna with mounting bracket for on-site installation outside the TopTronic® C zone control panel
  - 2G/3G/4G-LTE/5G-ready
  - SMA port available on the antenna
- Antenna extension cable for connecting the antenna in conjunction with the HovalSupervisor cloud
  - SMA port
  - Double shielded
  - Length: 5 m

Hoval

TopVent® MC

Supply air units for ventilating, heating and cooling spaces up to 25 m in height with central heat and cold supply (2-pipe-system)

1 Use 74
2 Construction and operation 74
3 Technical data 78
4 Specification texts 84

F

1 Use

1.1 Intended use

TopVent® MC units are supply air units for ventilating, heating and cooling spaces up to 25 m in height with central heat and cold supply. They have the following functions:

- Heating (with connection to a hot water supply)
- Cooling (with connection to a water chiller)
- Fresh air supply
- Mixed air operation
- Recirculation operation
- Air distribution and destratification with adjustable Air-Injector
- Air filtration

The TopVent® MC unit complies with all the requirements of the Ecodesign Regulation (EU) 2024/1781. It is a system of the “fan coil unit” type, provided for in Commission Regulation (EU) 2016/2281.

The Hoval TopTronic® C integrated control system ensures energy-efficient, demand-based operation of Hoval indoor climate systems.

Intended use also includes compliance with the operating instructions. Any usage over and above this use is considered to be not as intended. The manufacturer can accept no liability for damage resulting from improper use.

1.2 User group

The units are only allowed to be installed, operated and maintained by authorised and instructed personnel who are well acquainted with the units and are informed about possible dangers.

2 Construction and operation

2.1 Construction

The TopVent® MC unit consists of the following components:

- Mixed air box with fresh air and recirculation dampers linked to move in opposite directions, equipped with actuator with spring return
- Filter box:
  For air filtration, 2 pocket filters ISO Coarse 60% are installed.
- Heating/cooling section:
  - Heating/cooling coil for heating and cooling the supply air with hot water or cold water
  - Condensate separator
- Fan unit:
  - Radial fan with energy-saving EC motor
- Air-Injector:
  The Air-Injector is a patented, infinitely variable vortex air distributor for the draught-free introduction of air into the hall under changing operating conditions.

As part of the TopTronic® C control system, the unit control box is an integral component.

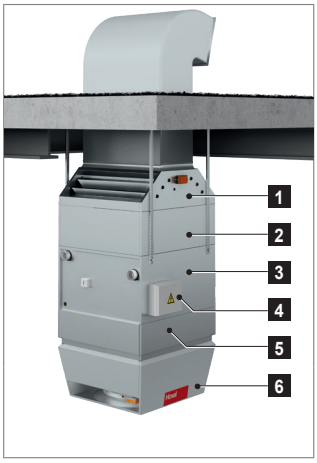

1	Mixed air box
2	Filter box
3	Heating/cooling section
4	Unit control box
5	Fan unit
6	Air-Injector

Fig. F1: TopVent® MC components

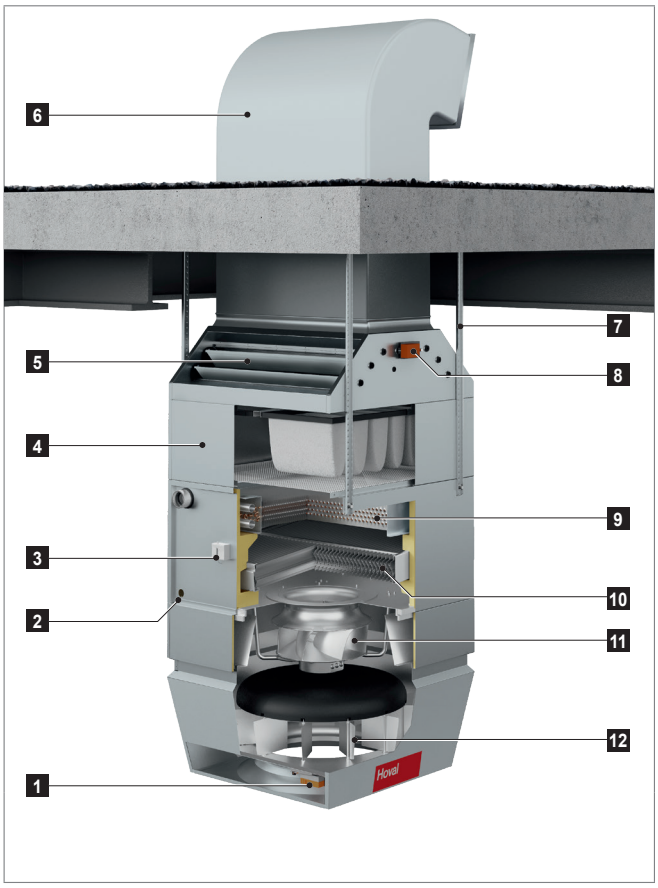

1	Actuator Air-Injector
2	Condensate connection
3	Frost controller
4	Filter box
5	Mixed air box
6	Fresh air duct (on-site)
7	Suspension set
8	Fresh air damper actuator
9	Heating/cooling coil
10	Condensate separator
11	Fan
12	Air-Injector

Fig. F2: TopVent® MC construction

2.2 Function diagram

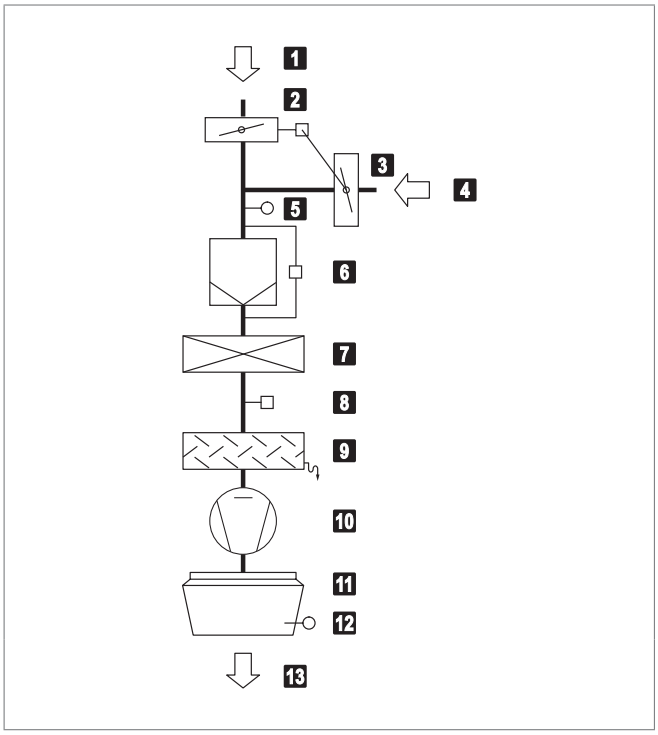

1	Fresh air
2	Fresh air damper with actuator
3	Recirculation damper (opposed to the fresh air damper)
4	Extract air
5	Mixed air temperature sensor
6	Air filter with differential pressure switch
7	Heating/cooling coil
8	Frost controller
9	Condensate separator
10	Fan
11	Air-Injector with actuator
12	Supply air temperature sensor
13	Supply air

Fig. F3: TopVent® MC function diagram

2.3 Operating modes

The TopVent® MC has the following operating modes:
- Supply air speed 2
- Supply air speed 1
- Recirculation
- Recirculation speed 1
- Standby

The TopTronic® C control system regulates these operating modes automatically for each control zone in accordance with the specifications in the calendar. The following points also apply:
- The operating mode of a control zone can be switched over manually.
- Each TopVent® unit can operate individually in a local operating mode: Off, Supply air speed 2, Supply air speed 1, Recirculation, Recirculation speed 1

Code	Operating mode		Description
SA2	**Supply air speed 2** The fan runs at speed 2 (high air flow rate). The room temperature set value day is active. The unit blows fresh air into the room. The control of the fresh air ratio can be selected:		
	<u>Fixed fresh air ratio:</u> The unit operates continuously with the set fresh air ratio. The system controls the heating/cooling according to the heating/cooling demand.	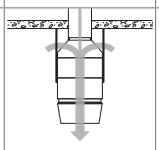	Fan ..... speed 2 Fresh air damper..... 10 % open [1)] Heating/cooling ..... 0-100 % [2)] [1)] Percentage is adjustable [2)] Depending on heat or cool demand
	<u>Variable fresh air ratio:</u> ■ The system regulates the fresh air ratio depending on the temperature. The set fresh air ratio serves as a minimum value. If the temperature conditions permit, more fresh air is brought into the room and used for free heating or free cooling. Only when this potential is fully utilised is the heating/cooling switched on via the coil if required. ■ If a combination sensor for room air is installed (option), the system additionally controls the fresh air ratio depending on the air quality: – If there is no heat demand, the fresh air damper is opened 100% if the indoor air quality is too poor. – When the setpoint value for the CO_2 or VOC content of the room air is reached, the fresh air damper closes again to the set minimum value. **Notice** In order to save heating energy, the unit only operates with the set minimum fresh air rate when heat is required.		Fan ..... speed 2 Fresh air damper..... MIN-100 % open [1)] Heating/cooling ..... 0-100 % [2)] [1)] A minimum value can be set [2)] Depending on heat or cool demand
SA1	**Supply air speed 1** The same as SA2, but the fan operates at speed 1 (low air flow rate)	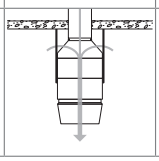	Fan ..... speed 1 Fresh air damper..... MIN-100 % open [1)] Heating/cooling ..... 0-100 % [1)] Fixed or variable (see above)

Code	Operating mode		Description
REC	**Recirculation** On/Off operation: during heat or cool demand, the unit draws in room air, heats or cools it and blows it back into the room. The room temperature set value day is active.	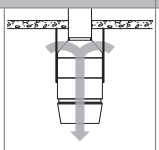	Fan ..... speed 1 / 2 [1)] Fresh air damper..... closed Heating/cooling ..... on [1)] [1)] Depending on heat or cool demand
DES	■ Destratification: To avoid heat build-up under the ceiling, it may be appropriate to switch on the fan when there is no heat or cool demand (either in permanent operation or in on/off operation depending on the temperature stratification, as desired).		Fan ..... speed 2 Fresh air damper..... closed Heating/cooling ..... off
REC1	**Recirculation speed 1** The same as REC, but the unit operates only at speed 1 (low air flow rate)	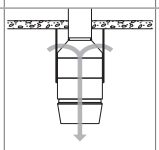	Fan ..... speed 1 Fresh air damper..... closed Heating/cooling ..... on [1)] [1)] Depending on heat or cool demand
DES	■ Destratification: The same as for REC, but the unit operates only at speed 1		Fan ..... speed 1 Fresh air damper..... closed Heating/cooling ..... off
ST	**Standby** The unit is ready for operation; the following operating modes are activated if required:	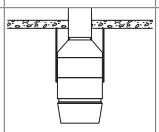	
CPR	■ Cooling protection: If the room temperature drops below the set value for cooling protection, the unit heats up the room in recirculation operation.	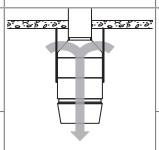	Fan ..... speed 2 Fresh air damper..... closed Heating ..... on
OPR	■ Overheat protection: If the room temperature rises above the set value for over-heating protection, the unit cools down the room in recirculation operation.		Fan ..... speed 2 Fresh air damper..... closed Cooling..... on
NCS	■ Night cooling: If the room temperature exceeds the set value for night cooling and the current fresh air temperature permits it, the unit blows cool fresh air into the room and extracts warmer room air.	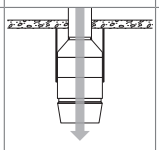	Fan ..... speed 2 Fresh air damper..... open Heating/cooling ..... off
L_OFF	**Off** (local operating mode) The unit is switched off; frost protection for the unit remains active.	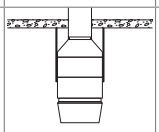	Fan ..... off Fresh air damper..... closed Heating/cooling ..... off
–	**Forced heating** The unit draws in room air, warms it and blows it back into the room. Forced heating can be activated and set as required by the Hoval service technician. For example, it is suitable for heating the hall before taking the control system into operation or if the controller fails during the heating period.	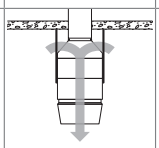	Fan ..... speed 2 [1)] Fresh air damper..... closed [1)] Heating ..... on [1)] [1)] Adjustable by the Hoval service technician

Table F1: TopVent® MC operating modes

F

3 Technical data

3.1 Type code

MC - 6 - C ...

Unit type
TopVent® MC

Unit size
6 or 9

Heating/cooling section
C with coil type C
D with coil type D

Further options

Table F2: Type code

3.2 Application limits

Extract air temperature		max.	°C	50
Moisture content of extract air		max.	g/kg	15
Supply air temperature		max.	°C	60
Temperature of the heating medium [1]		max.	°C	90
Pressure of the heating medium		max.	kPa	800
Air flow rate	Size 6: Size 9:	min. min.	m³/h m³/h	3100 5000
Condensate quantity	Size 6: Size 9:	max. max.	kg/h kg/h	90 150
The units cannot be used in: ■ Damp locations ■ Places with a corrosive or aggressive environment ■ Spaces with a large amount of dust ■ Areas where there is danger of explosion				

[1] Design for higher temperatures on request

Table F3: Application limits

3.3 Electrical connection

Unit type		MC-6	MC-9
Supply voltage	VAC	3 × 400	3 × 400
Permitted voltage tolerance	%	± 5	± 5
Frequency	Hz	50	50
Connected load	kW	1.7	3.5
Current consumption max.	A	3.0	5.9
Series fuse	A	13	13
Degree of protection	-	IP54	IP54

Table F4: Electrical connection

3.4 Air flow rate

Unit type		MC-6	MC-9
Nominal air flow rate	m³/h	6000	9000
Floor area covered	m²	537	946

Table F5: Air flow rate

3.5 Sound level

Unit type			MC-6-C	MC-9-C
Sound pressure level (at a distance of 5 m) [1]		dB(A)	60	58
Total sound power level		dB(A)	82	80
Octave sound power level	63 Hz	dB	80	81
	125 Hz	dB	81	84
	250 Hz	dB	88	78
	500 Hz	dB	78	77
	1000 Hz	dB	75	76
	2000 Hz	dB	73	72
	4000 Hz	dB	67	65
	8000 Hz	dB	57	56

[1] with a hemispherical radiation pattern in a low-reflection room

Table F6: Sound level

3.6 Air filtration

Filter	Fresh air / Extract air
Class acc. to ISO 16890	ISO coarse 60 %
Class acc. to EN 779	G4
Factory setting of differential pressure switches	180 Pa

Table F7: Air filtration

3.7 Heat output

Heating medium temperature			80/60 °C					60/40 °C				
Size	Type	t_F	Q	H_{max}	t_S	Δp_W	m_W	Q	H_{max}	t_S	Δp_W	m_W
		°C	kW	m	°C	kPa	l/h	kW	m	°C	kPa	l/h
MC-6	C	−5	76.8	9.7	55.5	18	3297	45.7	12.3	40.1	7	1965
		−15	78.2	9.7	55.2	19	3358	47.2	12.4	39.9	7	2026
MC-9	C	−5	119.0	10.1	56.8	18	5113	71.0	12.9	40.9	7	3050
		−15	121.2	10.1	56.5	19	5208	73.2	12.9	40.7	7	3145
	D	−5	142.0	9.3	64.4	15	6101	86.7	11.7	46.1	6	3725
		−15	144.6	9.4	64.2	15	6212	89.3	11.7	46.0	6	3837

Legend:
- Type = Type of coil
- t_F = Fresh air temperature
- Q = Heat output
- H_{max} = Maximum mounting height
- t_S = Supply air temperature
- Δp_W = Water pressure drop
- m_W = Water quantity

Reference:
- Room air 18 °C, extract air 20 °C / 20 % rel. humidity
- Fresh air ratio 10 %

Table F8: Heat output

3.8 Cooling capacity

Cooling medium temperature				6/12 °C						8/14 °C					
Size	Type	t_F	RH_F	Q_{sen}	Q_{tot}	t_S	Δp_W	m_W	m_C	Q_{sen}	Q_{tot}	t_S	Δp_W	m_W	m_C
		°C	%	kW	kW	°C	kPa	l/h	kg/h	kW	kW	°C	kPa	l/h	kg/h
MC-6	C	28	40	21.0	21.0	14.0	16	3000	0.0	18.5	18.5	15.2	13	2649	0.0
			60	20.7	20.7	14.2	16	2961	0.0	18.2	18.2	15.4	12	2609	0.0
		32	40	25.7	32.3	15.7	39	4630	9.7	23.3	26.1	16.9	25	3734	4.1
			60	25.4	34.1	15.8	43	4884	12.7	23.0	27.8	17.0	29	3988	7.1
MC-9	C	28	40	32.2	32.2	13.8	16	4614	0.0	28.4	28.4	15.0	12	4064	0.0
			60	31.8	31.8	13.9	16	4554	0.0	28.0	28.0	15.2	12	4004	0.0
		32	40	39.7	51.9	15.3	41	7432	18.0	35.8	35.8	16.6	20	5131	0.0
			60	39.3	54.7	15.4	46	7829	22.7	35.4	38.1	16.7	22	5459	4.0
	D	28	40	38.1	38.1	11.8	13	5451	0.0	33.2	33.2	13.4	10	4756	0.0
			60	37.7	37.8	12.0	13	5409	0.1	32.9	32.9	13.6	10	4706	0.0
		32	40	47.4	64.8	12.7	39	9285	25.6	42.6	53.3	14.3	26	7626	15.7
			60	47.1	68.3	12.9	43	9785	31.2	42.2	56.7	14.5	30	8126	21.3

Legend:
- Type = Type of coil
- t_F = Fresh air temperature
- RH_F = Relative humidity of the fresh air
- Q_{sen} = Sensible cooling capacity
- Q_{tot} = Total cooling capacity
- t_S = Supply air temperature
- Δp_W = Water pressure drop
- m_W = Water quantity
- m_C = Condensate quantity

Reference:
- At fresh air temperature 28 °C: room air 22 °C / 50 % RH, extract air 24 °C
- At fresh air temperature 32 °C: room air 26 °C / 50 % RH, extract air 28 °C

Fresh air ratio 10 %

Table F9: Cooling capacity

3.9 Product information according to ErP

Model	TopVent® MC			Unit
	6-C	9-C	9-D	
Cooling capacity (sensible) ($P_{rated,c}$)	26.5	41.0	48.6	kW
Cooling capacity (latent) ($P_{rated,c}$)	5.6	7.3	15.2	kW
Heating capacity ($P_{rated,h}$)	29.8	46.2	54.2	kW
Total electric power input (P_{elec})	1.12	1.42	1.54	kW
Sound power level (L_{WA})	82	80	81	dB
Contact	Hoval Aktiengesellschaft Austrasse 70, 9490 Vaduz, Liechtenstein www.hoval.com			

Table F10: Product information according to Commission Regulation (EU) 2016/2281, Table 13

F

3.10 Dimensions and weights

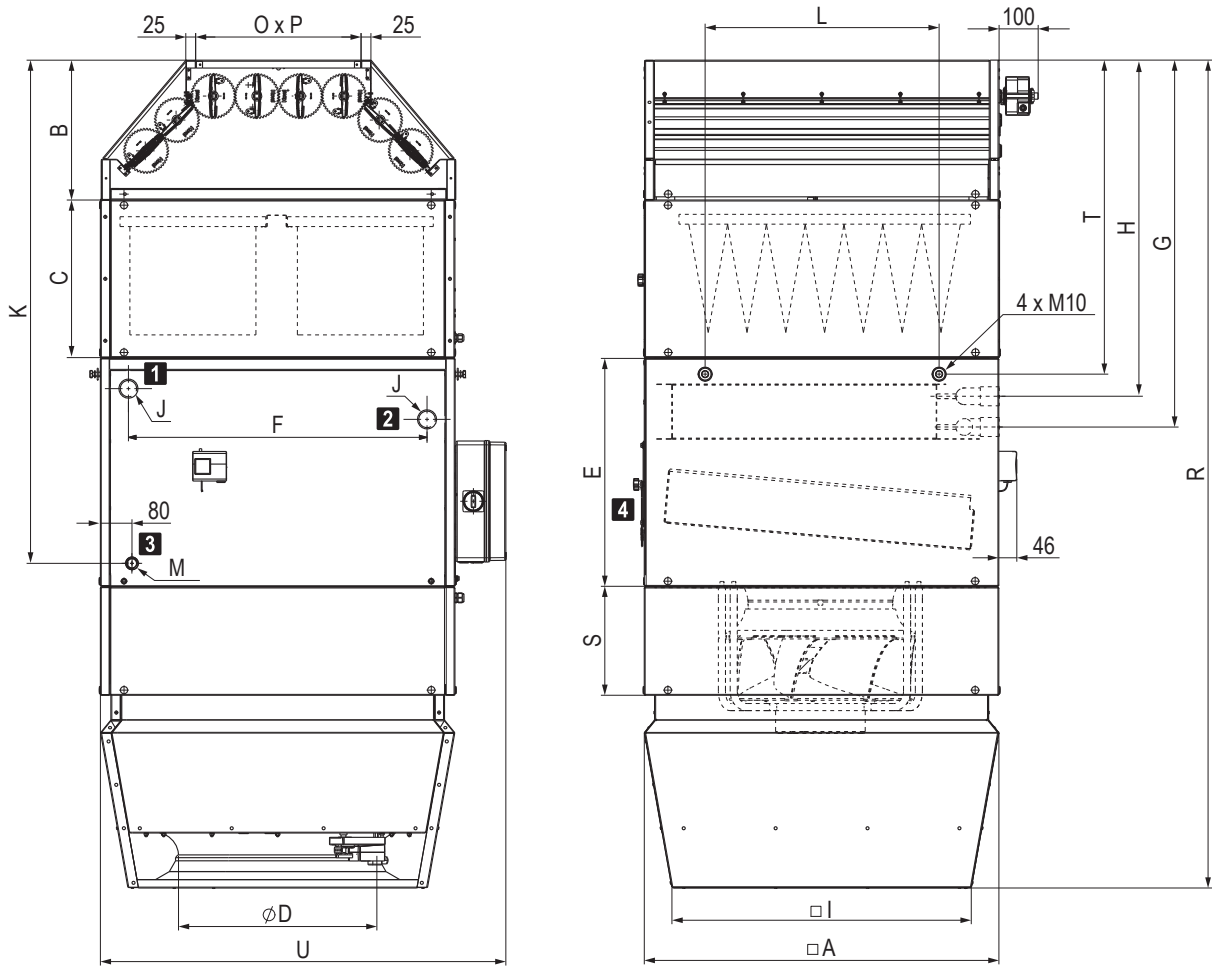

1 Return heating/cooling	3 Condensate connection
2 Flow heating/cooling	4 Access panel, condensate separator

Fig. F4: TopVent® MC dimensional drawing

Unit size		MC-6	MC-9	MC-9
Coil type		C	C	D
A	mm	900	1100	1100
B	mm	355	360	360
C	mm	400	400	400
D	mm	500	630	630
E	mm	579	615	615
F	mm	758	882	882
G	mm	910	931	940
H	mm	832	853	845
I	mm	760	935	935
K	mm	1276	1318	1318
L	mm	594	846	846
O × P	mm	420 × 850	500 × 1050	500 × 1050
R	mm	2100	2190	2190
S	mm	275	245	245
T	mm	795	900	900
U	mm	1028	1228	1228
J	"	Rp 1¼ (internal)	Rp 1½ (internal)	Rp 2 (internal)
M	"	G 1 (external)	G 1 (external)	G 1 (external)
Water content of heating/cooling coil	l	7.9	12.4	19.2
Weight	kg	253	332	343

Table F11: TopVent® MC dimensions and weights

4 Specification texts

4.1 TopVent® MC

Supply air unit for ventilating, heating and cooling rooms up to 25 m in height with central heat and cold supply (2-pipe system), equipped with highly efficient air distributor.

The unit consists of the following components:
- Fan unit
- Heating/cooling section
- Air-Injector
- Filter box
- Mixed air box
- Unit control box
- Optional components

The TopVent® MC unit complies with all the requirements of the Ecodesign Regulation (EU) 2024/1781. It is a system of the “fan coil unit” type, provided for in Commission Regulation (EU) 2016/2281.

Fan unit

Configured as radial fan with high-efficiency EC motor, backwards-curved, 3D contoured blades and free-running rotor made of a high-performance composite material, aerodynamically optimised inflow nozzle, low-noise, with integrated overload protection.

Heating/cooling section

Housing made of magnesium zinc sheet, air-tight, flame retardant, hygienic and easy to maintain because of ageing-resistant, silicone-free sealing materials, internally insulated with close-pored polyurethane.
The heating/cooling section contains:
- The highly efficient heating/cooling coil consisting of seamless copper pipes with pressed-on, optimised and profiled aluminium fins and manifolds made of copper; for connection to the hot water and cold water supply
- The pull-out condensate separator with collecting channel, made of high-quality corrosion-resistant material, with a downslope in all directions for rapid draining
- The condensate trap for connecting to a condensate drain (supplied)

Air-Injector

Housing made of magnesium zinc sheet, air-tight, flame retardant, hygienic and easy to maintain because of ageing-resistant, silicone-free sealing materials, internally insulated with closed-cell polyethylene foam, with:
- Vortex air distributor with concentric outlet nozzle, adjustable vanes and integrated absorber hood
- Actuator for infinitely variable adjustment of the air distribution from vertical to horizontal
  - for draught-free air distribution in the hall under changing operating conditions
  - for the rapid and large-area reduction of temperature stratification in the room through induction of secondary air and strong mixing of the room air with supply air
- Supply air temperature sensor

Filter box

Housing made of magnesium zinc sheet, internally insulated with closed-cell polyethylene foam, with 2 ISO coarse 60% bag filters (G4), with differential pressure switch for filter monitoring, factory-wired to the circuit board in the unit control box.

Mixed air box

Casing made of magnesium zinc sheet, internally insulated with closed-cell polyethylene foam, with fresh air damper and recirculation damper linked to move in opposite directions; includes actuator with spring return, factory-wired to the circuit board in the unit control box.

Unit control box

Control box fitted at the side of the unit for connection of the power supply and housing the control components that facilitate energy-optimised operation, controlled by the control system TopTronic® C. Plastic casing, degree of protection IP56. The following components are installed:
- Isolation switch
- Circuit board with all required electrical components, unit controller (clipped on) as well as connection terminals for the following external connections:
  - Heating/cooling valve
  - Heating/cooling pump
  - Return temperature sensor
  - Condensate pump
  - Forced off

The circuit board is fitted with push-in terminals facilitating easy installation of the connection cables. All components in the unit control box as well as sensors and actuators in the unit are fully factory-wired.
Power supply and bus connection to be installed on site.

Options for the unit

Suspension set
For ceiling installation of the unit consisting of 4 pairs U-profiles made of magnesium zinc sheet, height-adjustable to 1300 mm.

Standard paint finish
Exterior painting in Hoval red (RAL 3000), including optional components and suspension set.

Paint finish as desired
Exterior painting of the unit in choice of RAL colour, including optional components and suspension set.

Hydraulic assembly diverting system
Prefabricated assembly for hydraulic diverting system, consisting of mixing valve, regulating valve, ball valve, automatic air vent and screw connections for connection to the unit and to the distributor circuit; mixing valve with plug-in connection, sized for the coil in the unit and the Hoval TopTronic® C control system.

Mixing valve
Mixing valve with modulating rotary actuator and plug-in connection, sized for the coil in the unit.

Condensate pump
Consisting of a centrifugal pump and a drip tray, max. delivery rate of 150 l/h with a delivery head of 3 m. Condensate pump with connection cable enclosed.

Pump control for mixing or injection system
Electrical components for controlling a mixing or injection circuit in the load circuit, factory-installed in the unit control box.

Return temperature sensor
Temperature sensor for monitoring the heating medium.

4.2 TopTronic® C – System control

Zone-based control system for the energy-optimised operation of decentralised Hoval indoor climate systems. Maximum system size per system bus: 64 control zones with up to 10 supply and extract air handling units or supply air units and 10 recirculation units each.

Zone allocation
Configured in advance for the customer at the factory:

	Room designation	Unit type
Zone 1:	_____	_____
Zone 2:	_____	_____
…		

System structure
- Zone control panel made of coated sheet steel (light grey RAL 7035), … x … x … mm, with:
  - System operator terminal
  - Fresh air temperature sensor
  - 1 zone controller and 1 room temperature sensor per zone (expandable to up to 4 room temperature sensors per zone)
  - Safety relay
  - Electrical cabinet internally pre-wired, all components routed to terminals
- Zone bus: as serial bus for communication with all controllers in one control zone, with robust bus protocol via shielded, twisted bus cable (provided by the client)
- Unit controller: installed in the particular indoor climate unit, works autonomously according to the specifications of the zone controller
- Heating/cooling demand per zone with feedback monitoring

Functions, standard
- Zone-based autonomous room control. Temperature and ventilation control separately adjustable for each zone
- Room temperature control via room-supply air cascade by means of energy-optimised double sequence control with priority circuit for energy recovery (supply and extract air handling units)
- Intelligent automatic heating to reach the desired room temperature at the switching time
- 5 adjustable room temperature set values per zone:
  - Cooling protection (lower setpoint in Standby)
  - Overheating protection (upper setpoint in Standby)
  - Room set value winter
  - Room set value summer
  - Night cooling set value (free cooling) (supply and extract air handling units, supply air units)
- Destratification mode for even temperature distribution

- Main operating modes of supply and extract air handling units:
  VE .... Ventilation, infinitely variably adjustment
  AQ.... Air quality, automatic control with Hoval combination sensor (option), optional reference variable:
  – CO_2 or VOC
  – Air humidity (optimised dehumidification mode)
  REC . Recirculation, infinitely variably adjustment
  DES.. Destratification
  EA .... Exhaust air, infinitely variably adjustment
  SA .... Supply air, infinitely variably adjustment
  ST .... Standby

- Main operating modes of supply air units:
  REC . Recirculation, infinitely variably adjustment
  DES.. Destratification
  SA .... Supply air, infinitely variably adjustment
  With Hoval combination sensor (option) also demand-driven control of the fresh air ratio, optional reference variable CO_2 or VOC
  ST .... Standby

- Main operating modes of recirculation units:
  REC . Recirculation, infinitely variably adjustment
  DES.. Destratification
  ST .... Standby

- Forced heating (construction site heating) can be activated on each device before completion of the overall system (activation by Hoval service technician)
- Control of draught-free air distribution with the Hoval Air-Injector: the discharge direction is adjusted infinitely variably and automatically according to the respective operating condition and the existing temperatures (heating/cooling).

Operation

- TopTronic® C-ST system operator terminal: touch panel for visualisation and control of all Hoval indoor climate units registered on the bus

Options for operation

- Activation of the system operator terminal for VNC access, for visualisation on customer's PC
- TopTronic® C-ZT as zone operator terminal: for simple on-site operation of a control zone
- Manual operating selector switches
- Manual operating selector buttons
- Operating of the units via building management system via standardised interfaces:
  – BACnet
  – Modbus IP
  – Modbus RTU

Alarms, protection

- Central alarm management with registration of all alarms (timestamp, priority, status) in an alarm list and alarm memory of the last 50 alarms; forwarding via e-mail can be set in the parameters.
- If there is a failure of communication, bus stations, sensor systems or supply media, each part of the system transitions to a protection mode which safeguards operation.
- A maintenance mode implemented in the control algorithm for testing all physical data points and alarms guarantees high reliability.
- Pre-programmed data points retrievable via logger function for 1 year

Options for the zone control panel

- Alarm lamp
- Socket

Per zone:

- The change-over between heating and cooling can be either automatic or manual
  – Cooling lock switch for automatic changeover
  – Heating/cooling switch for manual changeover
- Additional room temperature sensors (max. 3)
- Combination sensor room air quality, temperature and humidity
- Combination sensor fresh air temperature and humidity
- Transfer of actual values from external systems (0-10 V; 4-20 mA)
- Transfer of setpoints from external systems (2-10 V; 4-20 mA)
- Load shedding input
- Signal for external extract air fan
- Operating selector switches on terminal
- Operating selector button on terminal
- Control of distributor pump, incl. power supply
- Control box TV | TW Pro

Power distribution:

- Circuit breakers and output terminals for Hoval indoor climate units
- Safety relay (4-pin)

4.3 TopTronic® C – Single zone control panel

Control system for the energy-optimised operation of decentralised Hoval indoor climate systems, standardised package solution for 1 single control zone, expandable with add-on zone control panels. Maximum system size per system bus: 64 control zones with up to 10 supply and extract air handling units or supply air units and 10 recirculation units each.

System structure

- Single zone control panel, designed as compact cabinet for wall installation, made of coated sheet steel (light grey RAL 7035), 380 × 300 × 210 mm, with:
  - System operator terminal
  - Fresh air temperature sensor
  - Zone controller
  - 1 Room temperature sensor (expandable to up to 4 room temperature sensors)
  - Safety relay
  - Electrical cabinet internally pre-wired, all components routed to terminals
- Zone bus: as serial bus for communication with all controllers in one control zone, with robust bus protocol via shielded, twisted bus cable (provided by the client)
- Unit controller: installed in the particular indoor climate unit, works autonomously according to the specifications of the zone controller
- Circuit board with external connections for:
  - Power supply
  - Zone bus
  - Room temperature sensors (max. 4)
  - Fresh air temperature sensor
  - Combination sensor room air quality, temperature and humidity
  - Collective alarm
  - Forced off
  - Heating demand
  - Setpoint heating demand
  - Fault heat supply
  - Cooling demand
  - Fault cold supply
  - External enabling heating/cooling (for automatic changeover)
  - External setting heating/cooling (for manual changeover)
  - Changeover valves heating/cooling
  - External setpoint fresh air ratio
  - Operating selector switch on terminal (digital)
  - Operating selector button on terminal

Functions, standard

- Room temperature control via sequential control of the coils
- Room temperature control via room-supply air cascade by means of energy-optimised double sequence control with priority circuit for energy recovery (supply and extract air handling units)
- Intelligent automatic heating to reach the desired room temperature at the switching time
- 5 adjustable room temperature set values per zone:
  - Cooling protection (lower setpoint in Standby)
  - Overheating protection (upper setpoint in Standby)
  - Room set value winter
  - Room set value summer
  - Night cooling set value (free cooling) (supply and extract air handling units, supply air units)
- Destratification mode for even temperature distribution

- Main operating modes of supply and extract air handling units:
  VE .... Ventilation, infinitely variably adjustment
  AQ.... Air quality, automatic control with Hoval combination sensor (option), optional reference variable CO_2 or VOC
  REC . Recirculation, infinitely variably adjustment
  DES.. Destratification
  EA .... Exhaust air, infinitely variably adjustment
  SA .... Supply air, infinitely variably adjustment
  ST .... Standby

- Main operating modes of supply air units:
  REC . Recirculation, infinitely variably adjustment
  DES.. Destratification
  SA .... Supply air, infinitely variably adjustment
  With Hoval combination sensor (option) also demand-driven control of the fresh air ratio, optional reference variable CO_2 or VOC
  ST .... Standby

- Main operating modes of recirculation units:
  REC . Recirculation, infinitely variably adjustment
  DES.. Destratification
  ST .... Standby

- Forced heating (construction site heating) can be activated on each device before completion of the overall system (activation by Hoval service technician)
- Control of draught-free air distribution with the Hoval Air-Injector: the discharge direction is adjusted infinitely variably and automatically according to the respective operating condition and the existing temperatures (heating/cooling).

Operation

- TopTronic® C-ST system operator terminal: touch panel for visualisation and control of all Hoval indoor climate units registered on the bus

F

Options for operation

- Activation of the system operator terminal for VNC access, for visualisation on customer's PC
- Operating of the units via building management system via standardised interfaces:
  - BACnet
  - Modbus IP
  - Modbus RTU

Alarms, protection

- Central alarm management with registration of all alarms (timestamp, priority, status) in an alarm list and alarm memory of the last 50 alarms; forwarding via e-mail can be set in the parameters.
- If there is a failure of communication, bus participants, sensor systems or supply media, each part of the system transitions to a protection mode which safeguards operation.
- A maintenance mode implemented in the control algorithm for testing all physical data points and alarms guarantees high reliability.
- Pre-programmed data points retrievable via logger function for 1 year

Options for the single zone control panel

- Add-on zone control panel, designed as compact cabinet for wall installation, made of coated sheet steel (light grey RAL 7035), 380 × 300 × 210 mm, with:
  - Zone controller
  - 1 Room temperature sensor (expandable to up to 4 room temperature sensors)
  - Safety relay
  - Electrical cabinet internally pre-wired, all components routed to terminals
- Additional room temperature sensors (max. 3)
- Combination sensor room air quality, temperature and humidity
- Signal for external extract air fan
- TV|TW Pro control box

4.4 HovalSupervisor cloud TopTronic® C

(Terms of use according to www.hoval.com/hsc are accepted when ordered.)

HovalSupervisor cloud TopTronic® C

Remote access, visualisation, historization, trends, evaluations and alarming for Hoval indoor climate systems with TopTronic® C control

- Project-specific system engineering
- Visualisation of the system statuses, error messages, actual and nominal values of the entire plant system
- Graphical display of the entire plant control system, in order to complete an analysis of sequences and subsequently to be able to perform an optimisation
- Integrated continuous line recorder for a period of 3 years
- Integrated alarm management
- Multi-user system: simultaneous access, 2 users included per plant
- Max. 300 data points historicized
- Max. 10 control zones

Consisting of:

- Project-specific engineering of the visualisation as described above
- Industrial router for connecting the TopTronic® C control system
  - Metal casing installed in the zone control panel
  - Without SIM card, free choice of phone network
  - Router configuration possible via web server
  - Network connections:
    2 x 10/100 Mbit Ethernet
    2 x SIM card slot
  - SMA connections:
    1 x WLAN
    2 x mobile data via integrated antenna
  - Power supply for industrial router installed in zone control panel

HovalSupervisor cloud TopTronic® C subscription

Subscription for use of the HovalSupervisor cloud for visualisation of a TopTronic® C system

- 1 year term (subscription billed once a year)
- Use of the HovalSupervisor cloud and storage of the data in the cloud
- Paid support during business hours (only for the software, not for the system)
- The respective valid conditions of use and the service level agreement (SLA) apply, which can be retrieved online.

Options for HovalSupervisor cloud

- Antenna to improve mobile data reception in conjunction with the HovalSupervisor cloud TopTronic® C
  - Antenna with mounting bracket for on-site installation outside the TopTronic® C zone control panel
  - 2G/3G/4G-LTE/5G-ready
  - SMA port available on the antenna
- Antenna extension cable for connecting the antenna in conjunction with the HovalSupervisor cloud
  - SMA port
  - Double shielded
  - Length: 5 m

Hoval

TopVent® MHC

Supply air units for ventilating, heating and cooling spaces up to 25 m in height with central heat and cold supply (4-pipe-system)

1 Use 92
2 Construction and operation 92
3 Technical data 96
4 Specification texts 102

G

1 Use

1.1 Intended use

TopVent® MHC units are supply air units for ventilating, heating and cooling spaces up to 25 m in height with central heat and cold supply. They have the following functions:

- Heating (with connection to a hot water supply)
- Cooling (with connection to a water chiller)
- Fresh air supply
- Mixed air operation
- Recirculation operation
- Air distribution and destratification with adjustable Air-Injector
- Air filtration

The TopVent® MHC unit complies with all the requirements of the Ecodesign Regulation (EU) 2024/1781. It is a system of the “fan coil unit” type, provided for in Commission Regulation (EU) 2016/2281.

The Hoval TopTronic® C integrated control system ensures energy-efficient, demand-based operation of Hoval indoor climate systems.

Intended use also includes compliance with the operating instructions. Any usage over and above this use is considered to be not as intended. The manufacturer can accept no liability for damage resulting from improper use.

1.2 User group

The units are only allowed to be installed, operated and maintained by authorised and instructed personnel who are well acquainted with the units and are informed about possible dangers.

2 Construction and operation

2.1 Construction

The TopVent® MHC unit consists of the following components:

- Mixed air box with fresh air and recirculation dampers linked to move in opposite directions, equipped with actuator with spring return
- Filter box:
  For air filtration, 2 pocket filters ISO Coarse 60% are installed.
- Heating section:
  – Heating coil for heating the supply air with hot water
- Cooling section:
  – Cooling coil for cooling the supply air with cold water
  – Condensate separator
- Fan unit:
  – Radial fan with energy-saving EC motor
- Air-Injector:
  The Air-Injector is a patented, infinitely variable vortex air distributor for the draught-free introduction of air into the hall under changing operating conditions.

As part of the TopTronic® C control system, the unit control box is an integral component.

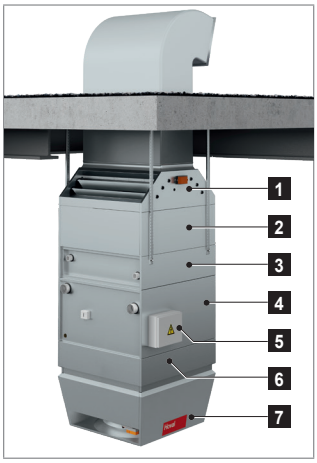

1	Mixed air box
2	Filter box
3	Heating section
4	Cooling section
5	Unit control box
6	Fan unit
7	Air-Injector

Fig. G1:
TopVent® MHC components

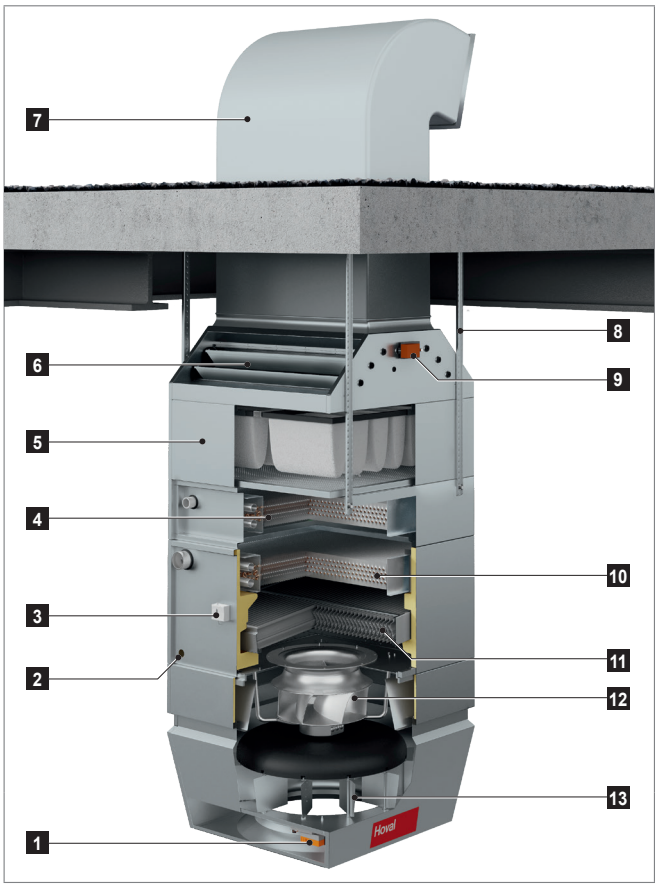

1	Actuator Air-Injector
2	Condensate connection
3	Frost controller
4	Heating coil
5	Filter box
6	Mixed air box
7	Fresh air duct (on-site)
8	Suspension set
9	Fresh air damper actuator
10	Cooling coil
11	Condensate separator
12	Fan
13	Air-Injector

Fig. G2: TopVent® MHC construction

2.2 Function diagram

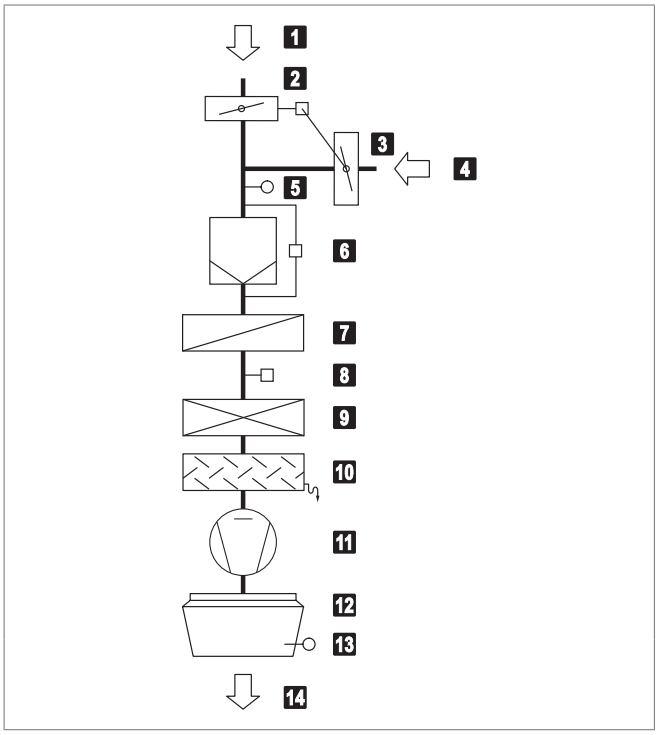

1	Fresh air
2	Fresh air damper with actuator
3	Recirculation damper (opposed to the fresh air damper)
4	Extract air
5	Mixed air temperature sensor
6	Air filter with differential pressure switch
7	Heating coil
8	Frost controller
9	Cooling coil
10	Condensate separator
11	Fan
12	Air-Injector with actuator
13	Supply air temperature sensor
14	Supply air

Fig. G3: TopVent® MHC function diagram

2.3 Operating modes

The TopVent® MHC has the following operating modes:
- Supply air speed 2
- Supply air speed 1
- Recirculation
- Recirculation speed 1
- Standby

The TopTronic® C control system regulates these operating modes automatically for each control zone in accordance with the specifications in the calendar. The following points also apply:
- The operating mode of a control zone can be switched over manually.
- Each TopVent® unit can operate individually in a local operating mode: Off, Supply air speed 2, Supply air speed 1, Recirculation, Recirculation speed 1

Code	Operating mode		Description
SA2	**Supply air speed 2** The fan runs at speed 2 (high air flow rate). The room temperature set value day is active. The unit blows fresh air into the room. The control of the fresh air ratio can be selected:		
	<u>Fixed fresh air ratio:</u> The unit operates continuously with the set fresh air ratio. The system controls the heating/cooling according to the heating/cooling demand.	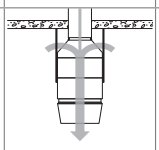	Fan ..... speed 2 Fresh air damper..... 10 % open [1)] Heating/cooling ..... 0-100 % [2)] [1)] Percentage is adjustable [2)] Depending on heat or cool demand
	<u>Variable fresh air ratio:</u> ■ The system regulates the fresh air ratio depending on the temperature. The set fresh air ratio serves as a minimum value. If the temperature conditions permit, more fresh air is brought into the room and used for free heating or free cooling. Only when this potential is fully utilised is the heating/cooling switched on via the coil if required. ■ If a combination sensor for room air is installed (option), the system additionally controls the fresh air ratio depending on the air quality: – If there is no heat demand, the fresh air damper is opened 100% if the indoor air quality is too poor. – When the setpoint value for the CO_2 or VOC content of the room air is reached, the fresh air damper closes again to the set minimum value. **Notice** In order to save heating energy, the unit only operates with the set minimum fresh air rate when heat is required.		Fan ..... speed 2 Fresh air damper..... MIN-100 % open [1)] Heating/cooling ..... 0-100 % [2)] [1)] A minimum value can be set [2)] Depending on heat or cool demand
SA1	**Supply air speed 1** The same as SA2, but the fan operates at speed 1 (low air flow rate)	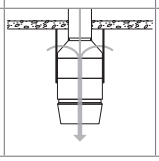	Fan ..... speed 1 Fresh air damper..... MIN-100 % open [1)] Heating/cooling ..... 0-100 % [1)] Fixed or variable (see above)

Code	Operating mode		Description
REC	**Recirculation** On/Off operation: during heat or cool demand, the unit draws in room air, heats or cools it and blows it back into the room. The room temperature set value day is active.	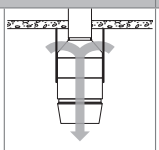	Fan ..... speed 1 / 2 [1)] Fresh air damper..... closed Heating/cooling ..... on [1)] [1)] Depending on heat or cool demand
DES	■ Destratification: To avoid heat build-up under the ceiling, it may be appropriate to switch on the fan when there is no heat or cool demand (either in permanent operation or in on/off operation depending on the temperature stratification, as desired).		Fan ..... speed 2 Fresh air damper..... closed Heating/cooling ..... off
REC1	**Recirculation speed 1** The same as REC, but the unit operates only at speed 1 (low air flow rate)	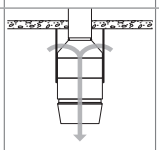	Fan ..... speed 1 Fresh air damper..... closed Heating/cooling ..... on [1)] [1)] Depending on heat or cool demand
DES	■ Destratification: The same as for REC, but the unit operates only at speed 1		Fan ..... speed 1 Fresh air damper..... closed Heating/cooling ..... off
ST	**Standby** The unit is ready for operation; the following operating modes are activated if required:	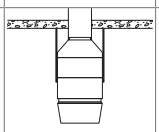	
CPR	■ Cooling protection: If the room temperature drops below the set value for cooling protection, the unit heats up the room in recirculation operation.	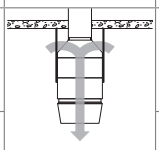	Fan ..... speed 2 Fresh air damper..... closed Heating ..... on
OPR	■ Overheat protection: If the room temperature rises above the set value for over-heating protection, the unit cools down the room in recirculation operation.		Fan ..... speed 2 Fresh air damper..... closed Cooling..... on
NCS	■ Night cooling: If the room temperature exceeds the set value for night cooling and the current fresh air temperature permits it, the unit blows cool fresh air into the room and extracts warmer room air.	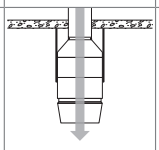	Fan ..... speed 2 Fresh air damper..... open Heating/cooling ..... off
L_OFF	**Off** (local operating mode) The unit is switched off; frost protection for the unit remains active.	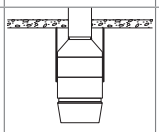	Fan ..... off Fresh air damper..... closed Heating/cooling ..... off
–	**Forced heating** The unit draws in room air, warms it and blows it back into the room. Forced heating can be activated and set as required by the Hoval service technician. For example, it is suitable for heating the hall before taking the control system into operation or if the controller fails during the heating period.	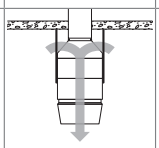	Fan ..... speed 2 [1)] Fresh air damper..... closed [1)] Heating ..... on [1)] [1)] Adjustable by the Hoval service technician

Table G1: TopVent® MHC operating modes

G

3 Technical data

3.1 Type code

MHC - 6 A C ...

Unit type
TopVent® MHC

Unit size
6 or 9

Heating section
A with coil type A
B with coil type B
C with coil type C

Cooling section
C with coil type C
D with coil type D

Further options

Table G2: Type code

3.2 Application limits

Extract air temperature		max.	°C	50
Moisture content of extract air		max.	g/kg	15
Supply air temperature		max.	°C	60
Temperature of the heating medium [1]		max.	°C	90
Pressure of the heating medium		max.	kPa	800
Air flow rate	Size 6: Size 9:	min. min.	m³/h m³/h	3100 5000
Condensate quantity	Size 6: Size 9:	max. max.	kg/h kg/h	90 150
The units cannot be used in: ■ Damp locations ■ Places with a corrosive or aggressive environment ■ Spaces with a large amount of dust ■ Areas where there is danger of explosion				
[1] Design for higher temperatures on request				

Table G3: Application limits

3.3 Electrical connection

Unit type		MHC-6	MHC-9
Supply voltage	VAC	3 × 400	3 × 400
Permitted voltage tolerance	%	± 5	± 5
Frequency	Hz	50	50
Connected load	kW	1.9	3.7
Current consumption max.	A	3.0	5.9
Series fuse	A	13	13
Degree of protection	-	IP54	IP54

Table G4: Electrical connection

3.4 Air flow rate

Unit type		MHC-6	MHC-9
Nominal air flow rate	m³/h	6000	9000
Floor area covered	m²	537	946

Table G5: Air flow rate

3.5 Sound level

Unit type			MHC-6CC	MHC-9CC
Sound pressure level (at a distance of 5 m) [1]		dB(A)	61	60
Total sound power level		dB(A)	83	82
Octave sound power level	63 Hz	dB	81	82
	125 Hz	dB	83	86
	250 Hz	dB	90	80
	500 Hz	dB	79	79
	1000 Hz	dB	77	77
	2000 Hz	dB	74	74
	4000 Hz	dB	68	67
	8000 Hz	dB	59	57

[1] with a hemispherical radiation pattern in a low-reflection room

Table G6: Sound level

3.6 Air filtration

Filter	Fresh air / Extract air
Class acc. to ISO 16890	ISO coarse 60 %
Class acc. to EN 779	G4
Factory setting of differential pressure switches	180 Pa

Table G7: Air filtration

3.7 Heat output

Heating medium temperature			80/60 °C					60/40 °C				
Size	Type	t_F	Q	H_{max}	t_S	Δp_W	m_W	Q	H_{max}	t_S	Δp_W	m_W
		°C	kW	m	°C	kPa	l/h	kW	m	°C	kPa	l/h
MHC-6	A	−5	33.1	14.4	33.9	7	1424	19.1	18.8	27.0	2	820
		−15	33.8	14.7	33.2	8	1451	19.7	19.5	26.3	3	848
	B	−5	47.5	12.1	41.0	13	2040	27.4	15.7	31.1	4	1177
		−15	48.4	12.2	40.5	14	2079	28.3	16.1	30.5	5	1216
	C	−5	76.8	9.7	55.5	18	3297	45.7	12.3	40.1	7	1965
		−15	78.2	9.7	55.2	19	3358	47.2	12.4	39.9	7	2026
MHC-9	A	−5	56.1	14.4	36.0	8	2409	32.3	18.8	28.2	3	1387
		−15	57.1	14.6	35.4	8	2455	33.4	19.4	27.5	3	1433
	B	−5	71.9	12.8	41.2	12	3090	41.3	16.7	31.1	4	1775
		−15	73.3	12.9	40.7	13	3149	42.7	17.0	30.6	4	1834
	C	−5	119.0	10.1	56.8	18	5113	71.0	12.9	40.9	7	3050
		−15	121.2	10.1	56.5	19	5208	73.2	12.9	40.7	7	3145

Legend:
- Type = Type of coil
- t_F = Fresh air temperature
- Q = Heat output
- H_{max} = Maximum mounting height
- t_S = Supply air temperature
- Δp_W = Water pressure drop
- m_W = Water quantity

Reference:
- Room air 18 °C, extract air 20 °C / 20 % rel. humidity
- Fresh air ratio 10 %

Table G8: Heat output

3.8 Cooling capacity

Cooling medium temperature				6/12 °C						8/14 °C					
Size	Type	t_F	RH_F	Q_{sen}	Q_{tot}	t_S	Δp_W	m_W	m_C	Q_{sen}	Q_{tot}	t_S	Δp_W	m_W	m_C
		°C	%	kW	kW	°C	kPa	l/h	kg/h	kW	kW	°C	kPa	l/h	kg/h
MHC-6	C	28	40	21.0	21.0	14.0	16	3000	0.0	18.5	18.5	15.2	13	2649	0.0
			60	20.7	20.7	14.2	16	2961	0.0	18.2	18.2	15.4	12	2609	0.0
		32	40	25.7	32.3	15.7	39	4630	9.7	23.3	26.1	16.9	25	3734	4.1
			60	25.4	34.1	15.8	43	4884	12.7	23.0	27.8	17.0	29	3988	7.1
MHC-9	C	28	40	32.2	32.2	13.8	16	4614	0.0	28.4	28.4	15.0	12	4064	0.0
			60	31.8	31.8	13.9	16	4554	0.0	28.0	28.0	15.2	12	4004	0.0
		32	40	39.7	51.9	15.3	41	7432	18.0	35.8	35.8	16.6	20	5131	0.0
			60	39.3	54.7	15.4	46	7829	22.7	35.4	38.1	16.7	22	5459	4.0
	D	28	40	38.1	38.1	11.8	13	5451	0.0	33.2	33.2	13.4	10	4756	0.0
			60	37.7	37.8	12.0	13	5409	0.1	32.9	32.9	13.6	10	4706	0.0
		32	40	47.4	64.8	12.7	39	9285	25.6	42.6	53.3	14.3	26	7626	15.7
			60	47.1	68.3	12.9	43	9785	31.2	42.2	56.7	14.5	30	8126	21.3

Legend:
- Type = Type of coil
- t_F = Fresh air temperature
- RH_F = Relative humidity of the fresh air
- Q_{sen} = Sensible cooling capacity
- Q_{tot} = Total cooling capacity
- t_S = Supply air temperature
- Δp_W = Water pressure drop
- m_W = Water quantity
- m_C = Condensate quantity

Reference:
- At fresh air temperature 28 °C: room air 22 °C / 50 % RH, extract air 24 °C
- At fresh air temperature 32 °C: room air 26 °C / 50 % RH, extract air 28 °C

Fresh air ratio 10 %

Table G9: Cooling capacity

G

3.9 Product information according to ErP

Model	TopVent® MHC									Unit
	6-AC	6-BC	6-CC	9-AC	9-BC	9-CC	9-AD	9-BD	9-CD	
Cooling capacity (sensible) ($P_{rated,c}$)	26.5	26.5	26.5	41.0	41.0	41.0	48.6	48.6	48.6	kW
Cooling capacity (latent) ($P_{rated,c}$)	5.6	5.6	5.6	7.3	7.3	7.3	15.2	15.2	15.2	kW
Heating capacity ($P_{rated,h}$)	13.2	18.9	29.8	22.6	28.5	46.2	22.6	28.5	46.2	kW
Total electric power input (P_{elec})	1.20	1.23	1.35	1.57	1.62	1.77	1.70	1.75	1.90	kW
Sound power level (L_{WA})	83	83	83	81	81	82	82	82	82	dB
Contact	Hoval Aktiengesellschaft Austrasse 70, 9490 Vaduz, Liechtenstein www.hoval.com									

Table G10: Product information according to Commission Regulation (EU) 2016/2281, Table 13

3.10 Dimensions and weights

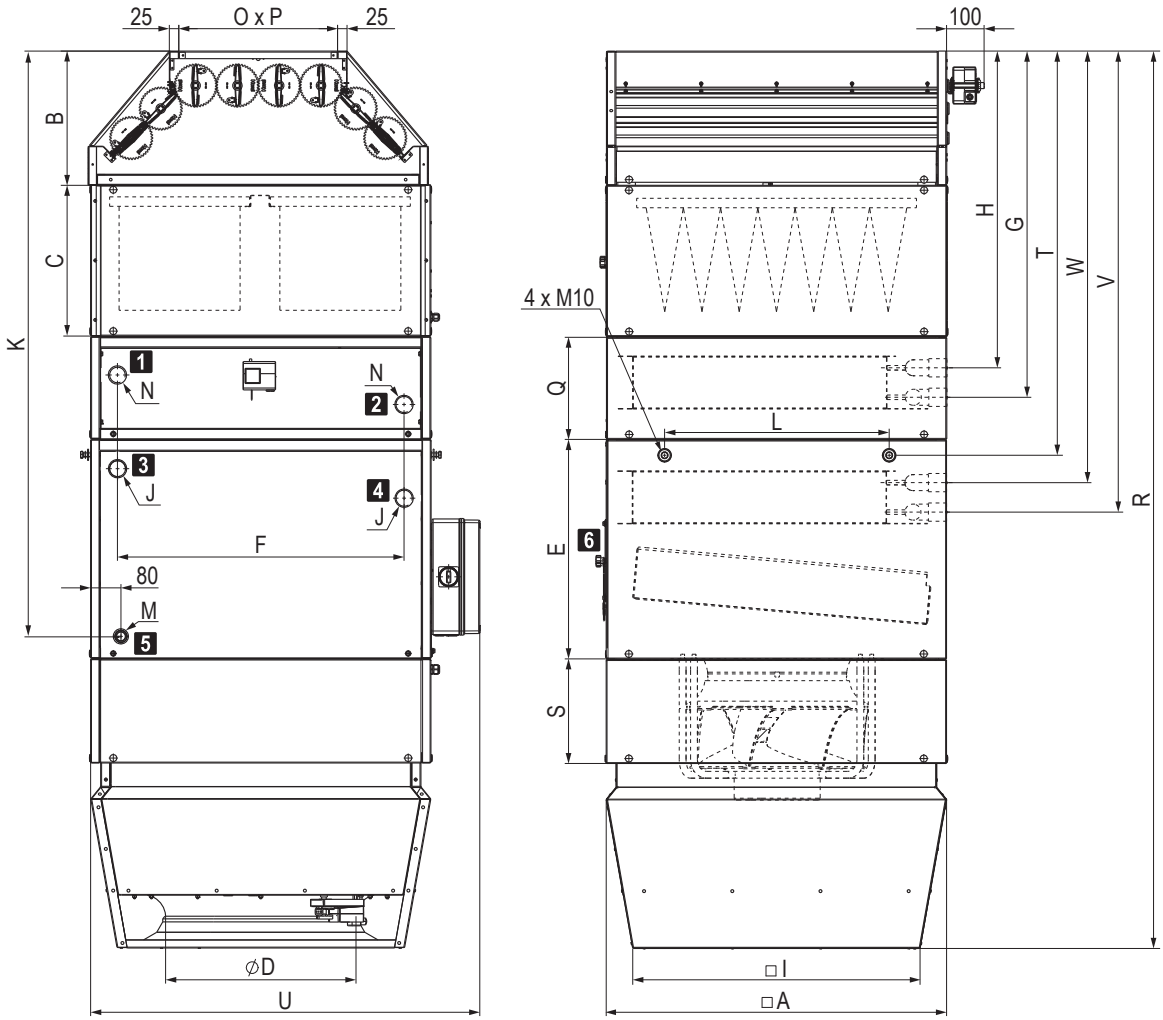

1	Return heating	4	Flow cooling
2	Flow heating	5	Condensate connection
3	Return cooling	6	Access panel, condensate separator

Fig. G4: TopVent® MHC dimensional drawing

Unit size		MHC-6			MHC-9			MHC-9		
Coil type		AC	BC	CC	AC	BC	CC	AD	BD	CD
A	mm	900			1100			1100		
B	mm	355			360			360		
C	mm	400			400			400		
D	mm	500			630			630		
E	mm	579			615			615		
F	mm	758			882			882		
G	mm	936			951			951		
H	mm	858			873			873		
I	mm	760			935			935		
K	mm	1550			1622			1622		
L	mm	594			846			846		
O × P	mm	420 × 850			500 × 1050			500 × 1050		
Q	mm	270			300			300		
R	mm	2374			2496			2496		
S	mm	275			245			245		
T	mm	1069			1104			1104		
U	mm	1028			1228			1228		
V	mm	1184			1235			1244		
W	mm	1106			1157			1149		
N	"	Rp 1¼ (internal)			Rp 1½ (internal)			Rp 1½ (internal)		
J	"	Rp 1¼ (internal)			Rp 1½ (internal)			Rp 2 (internal)		
M	"	G 1 (external)			G 1 (external)			G 1 (external)		
Water content of heating coil	l	4.6	4.6	7.9	7.4	7.4	12.4	7.4	7.4	12.4
Water content of cooling coil	l	7.9	7.9	7.9	12.4	12.4	12.4	19.2	19.2	19.2
Weight	kg	286	286	292	386	386	397	397	397	408

Table G11: TopVent® MHC dimensions and weights

4 Specification texts

4.1 TopVent® MHC

Supply air unit for ventilating, heating and cooling rooms up to 25 m in height with central heat and cold supply (4-pipe system), equipped with highly efficient air distributor.

The unit consists of the following components:
- Fan unit
- Heating section
- Cooling section
- Air-Injector
- Filter box
- Mixed air box
- Unit control box
- Optional components

The TopVent® MC unit complies with all the requirements of the Ecodesign Regulation (EU) 2024/1781. It is a system of the “fan coil unit” type, provided for in Commission Regulation (EU) 2016/2281.

Fan unit

Configured as radial fan with high-efficiency EC motor, backwards-curved, 3D contoured blades and free-running rotor made of a high-performance composite material, aerodynamically optimised inflow nozzle, low-noise, with integrated overload protection.

Heating section

Housing made of magnesium zinc sheet, air-tight, flame retardant, hygienic and easy to maintain because of ageing-resistant, silicone-free sealing materials, internally insulated with EPDM.
The heating section contains:
- The highly efficient heating coil consisting of seamless copper pipes with pressed-on, optimised and profiled aluminium fins and manifolds made of copper; for connection to the hot water supply

Cooling section

Housing made of magnesium zinc sheet, air-tight, flame retardant, hygienic and easy to maintain because of ageing-resistant, silicone-free sealing materials, internally insulated with close-pored polyurethane.
The cooling section contains:
- The highly efficient cooling coil consisting of seamless copper pipes with pressed-on, optimised and profiled aluminium fins and manifolds made of copper; for connection to the cold water supply
- The pull-out condensate separator with collecting channel, made of high-quality corrosion-resistant material, with a downslope in all directions for rapid draining
- The condensate trap for connecting to a condensate drain (supplied)

Air-Injector

Housing made of magnesium zinc sheet, air-tight, flame retardant, hygienic and easy to maintain because of ageing-resistant, silicone-free sealing materials, internally insulated with closed-cell polyethylene foam, with:
- Vortex air distributor with concentric outlet nozzle, adjustable vanes and integrated absorber hood
- Actuator for infinitely variable adjustment of the air distribution from vertical to horizontal
  - for draught-free air distribution in the hall under changing operating conditions
  - for the rapid and large-area reduction of temperature stratification in the room through induction of secondary air and strong mixing of the room air with supply air
- Supply air temperature sensor

Filter box

Housing made of magnesium zinc sheet, internally insulated with closed-cell polyethylene foam, with 2 ISO coarse 60% bag filters (G4), with differential pressure switch for filter monitoring, factory-wired to the circuit board in the unit control box.

Mixed air box

Casing made of magnesium zinc sheet, internally insulated with closed-cell polyethylene foam, with fresh air damper and recirculation damper linked to move in opposite directions; includes actuator with spring return, factory-wired to the circuit board in the unit control box.

Unit control box

Control box fitted at the side of the unit for connection of the power supply and housing the control components that facilitate energy-optimised operation, controlled by the control system TopTronic® C. Plastic casing, degree of protection IP56. The following components are installed:

- Isolation switch
- Circuit board with all required electrical components, unit controller (clipped on) as well as connection terminals for the following external connections:
  - Heating/cooling valve
  - Heating/cooling pump
  - Return temperature sensor
  - Condensate pump
  - Forced off

The circuit board is fitted with push-in terminals facilitating easy installation of the connection cables. All components in the unit control box as well as sensors and actuators in the unit are fully factory-wired.
Power supply and bus connection to be installed on site.

Options for the unit

Suspension set
For ceiling installation of the unit consisting of 4 pairs U-profiles made of magnesium zinc sheet, height-adjustable to 1300 mm.

Standard paint finish
Exterior painting in Hoval red (RAL 3000), including optional components and suspension set.

Paint finish as desired
Exterior painting of the unit in choice of RAL colour, including optional components and suspension set.

Hydraulic assembly diverting system
Prefabricated assembly for hydraulic diverting system, consisting of mixing valve, regulating valve, ball valve, automatic air vent and screw connections for connection to the unit and to the distributor circuit; mixing valve with plug-in connection, sized for the coil in the unit and the Hoval TopTronic® C control system.

Mixing valve
Mixing valve with modulating rotary actuator and plug-in connection, sized for the coil in the unit.

Condensate pump
Consisting of a centrifugal pump and a drip tray, max. delivery rate of 150 l/h with a delivery head of 3 m. Condensate pump with connection cable enclosed.

Pump control for mixing or injection system
Electrical components for controlling a mixing or injection circuit in the load circuit, factory-installed in the unit control box.

Return temperature sensor
Temperature sensor for monitoring the heating medium.

4.2 TopTronic® C – System control

Zone-based control system for the energy-optimised operation of decentralised Hoval indoor climate systems. Maximum system size per system bus: 64 control zones with up to 10 supply and extract air handling units or supply air units and 10 recirculation units each.

Zone allocation
Configured in advance for the customer at the factory:

	Room designation	Unit type
Zone 1:	_____	_____
Zone 2:	_____	_____
…		

System structure
- Zone control panel made of coated sheet steel (light grey RAL 7035), … x … x … mm, with:
  - System operator terminal
  - Fresh air temperature sensor
  - 1 zone controller and 1 room temperature sensor per zone (expandable to up to 4 room temperature sensors per zone)
  - Safety relay
  - Electrical cabinet internally pre-wired, all components routed to terminals
- Zone bus: as serial bus for communication with all controllers in one control zone, with robust bus protocol via shielded, twisted bus cable (provided by the client)
- Unit controller: installed in the particular indoor climate unit, works autonomously according to the specifications of the zone controller
- Heating/cooling demand per zone with feedback monitoring

Functions, standard
- Zone-based autonomous room control. Temperature and ventilation control separately adjustable for each zone
- Room temperature control via room-supply air cascade by means of energy-optimised double sequence control with priority circuit for energy recovery (supply and extract air handling units)
- Intelligent automatic heating to reach the desired room temperature at the switching time
- 5 adjustable room temperature set values per zone:
  - Cooling protection (lower setpoint in Standby)
  - Overheating protection (upper setpoint in Standby)
  - Room set value winter
  - Room set value summer
  - Night cooling set value (free cooling) (supply and extract air handling units, supply air units)
- Destratification mode for even temperature distribution
- Main operating modes of supply and extract air handling units:
  VE .... Ventilation, infinitely variably adjustment
  AQ.... Air quality, automatic control with Hoval combination sensor (option), optional reference variable:
  – CO_2 or VOC
  – Air humidity (optimised dehumidification mode)
  REC . Recirculation, infinitely variably adjustment
  DES.. Destratification
  EA .... Exhaust air, infinitely variably adjustment
  SA .... Supply air, infinitely variably adjustment
  ST .... Standby
- Main operating modes of supply air units:
  REC . Recirculation, infinitely variably adjustment
  DES.. Destratification
  SA .... Supply air, infinitely variably adjustment
  With Hoval combination sensor (option) also demand-driven control of the fresh air ratio, optional reference variable CO_2 or VOC
  ST .... Standby
- Main operating modes of recirculation units:
  REC . Recirculation, infinitely variably adjustment
  DES.. Destratification
  ST .... Standby
- Forced heating (construction site heating) can be activated on each device before completion of the overall system (activation by Hoval service technician)
- Control of draught-free air distribution with the Hoval Air-Injector: the discharge direction is adjusted infinitely variably and automatically according to the respective operating condition and the existing temperatures (heating/cooling).

Operation
- TopTronic® C-ST system operator terminal: touch panel for visualisation and control of all Hoval indoor climate units registered on the bus

Options for operation
- Activation of the system operator terminal for VNC access, for visualisation on customer's PC
- TopTronic® C-ZT as zone operator terminal: for simple on-site operation of a control zone
- Manual operating selector switches
- Manual operating selector buttons
- Operating of the units via building management system via standardised interfaces:
  – BACnet
  – Modbus IP
  – Modbus RTU

Alarms, protection

- Central alarm management with registration of all alarms (timestamp, priority, status) in an alarm list and alarm memory of the last 50 alarms; forwarding via e-mail can be set in the parameters.
- If there is a failure of communication, bus stations, sensor systems or supply media, each part of the system transitions to a protection mode which safeguards operation.
- A maintenance mode implemented in the control algorithm for testing all physical data points and alarms guarantees high reliability.
- Pre-programmed data points retrievable via logger function for 1 year

Options for the zone control panel

- Alarm lamp
- Socket

Per zone:

- The change-over between heating and cooling can be either automatic or manual
  - Cooling lock switch for automatic changeover
  - Heating/cooling switch for manual changeover
- Additional room temperature sensors (max. 3)
- Combination sensor room air quality, temperature and humidity
- Combination sensor fresh air temperature and humidity
- Transfer of actual values from external systems (0-10 V; 4-20 mA)
- Transfer of setpoints from external systems (2-10 V; 4-20 mA)
- Load shedding input
- Signal for external extract air fan
- Operating selector switches on terminal
- Operating selector button on terminal
- Control of distributor pump, incl. power supply
- Control box TV | TW Pro

Power distribution:

- Circuit breakers and output terminals for Hoval indoor climate units
- Safety relay (4-pin)

4.3 TopTronic® C – Single zone control panel

Control system for the energy-optimised operation of decentralised Hoval indoor climate systems, standardised package solution for 1 single control zone, expandable with add-on zone control panels. Maximum system size per system bus: 64 control zones with up to 10 supply and extract air handling units or supply air units and 10 recirculation units each.

System structure

- Single zone control panel, designed as compact cabinet for wall installation, made of coated sheet steel (light grey RAL 7035), 380 × 300 × 210 mm, with:
  - System operator terminal
  - Fresh air temperature sensor
  - Zone controller
  - 1 Room temperature sensor (expandable to up to 4 room temperature sensors)
  - Safety relay
  - Electrical cabinet internally pre-wired, all components routed to terminals
- Zone bus: as serial bus for communication with all controllers in one control zone, with robust bus protocol via shielded, twisted bus cable (provided by the client)
- Unit controller: installed in the particular indoor climate unit, works autonomously according to the specifications of the zone controller
- Circuit board with external connections for:
  - Power supply
  - Zone bus
  - Room temperature sensors (max. 4)
  - Fresh air temperature sensor
  - Combination sensor room air quality, temperature and humidity
  - Collective alarm
  - Forced off
  - Heating demand
  - Setpoint heating demand
  - Fault heat supply
  - Cooling demand
  - Fault cold supply
  - External enabling heating/cooling (for automatic changeover)
  - External setting heating/cooling (for manual changeover)
  - Changeover valves heating/cooling
  - External setpoint fresh air ratio
  - Operating selector switch on terminal (digital)
  - Operating selector button on terminal

Functions, standard

- Room temperature control via sequential control of the coils
- Room temperature control via room-supply air cascade by means of energy-optimised double sequence control with priority circuit for energy recovery (supply and extract air handling units)

- Intelligent automatic heating to reach the desired room temperature at the switching time
- 5 adjustable room temperature set values per zone:
  - Cooling protection (lower setpoint in Standby)
  - Overheating protection (upper setpoint in Standby)
  - Room set value winter
  - Room set value summer
  - Night cooling set value (free cooling) (supply and extract air handling units, supply air units)
- Destratification mode for even temperature distribution

- Main operating modes of supply and extract air handling units:
  VE .... Ventilation, infinitely variably adjustment
  AQ.... Air quality, automatic control with Hoval combination sensor (option), optional reference variable CO_2 or VOC
  REC . Recirculation, infinitely variably adjustment
  DES.. Destratification
  EA .... Exhaust air, infinitely variably adjustment
  SA .... Supply air, infinitely variably adjustment
  ST .... Standby

- Main operating modes of supply air units:
  REC . Recirculation, infinitely variably adjustment
  DES.. Destratification
  SA .... Supply air, infinitely variably adjustment
  With Hoval combination sensor (option) also demand-driven control of the fresh air ratio, optional reference variable CO_2 or VOC
  ST .... Standby

- Main operating modes of recirculation units:
  REC . Recirculation, infinitely variably adjustment
  DES.. Destratification
  ST .... Standby

- Forced heating (construction site heating) can be activated on each device before completion of the overall system (activation by Hoval service technician)
- Control of draught-free air distribution with the Hoval Air-Injector: the discharge direction is adjusted infinitely variably and automatically according to the respective operating condition and the existing temperatures (heating/cooling).

Operation

- TopTronic® C-ST system operator terminal: touch panel for visualisation and control of all Hoval indoor climate units registered on the bus

Options for operation

- Activation of the system operator terminal for VNC access, for visualisation on customer's PC
- Operating of the units via building management system via standardised interfaces:
  - BACnet
  - Modbus IP
  - Modbus RTU

Alarms, protection

- Central alarm management with registration of all alarms (timestamp, priority, status) in an alarm list and alarm memory of the last 50 alarms; forwarding via e-mail can be set in the parameters.
- If there is a failure of communication, bus participants, sensor systems or supply media, each part of the system transitions to a protection mode which safeguards operation.
- A maintenance mode implemented in the control algorithm for testing all physical data points and alarms guarantees high reliability.
- Pre-programmed data points retrievable via logger function for 1 year

Options for the single zone control panel

- Add-on zone control panel, designed as compact cabinet for wall installation, made of coated sheet steel (light grey RAL 7035), 380 × 300 × 210 mm, with:
  - Zone controller
  - 1 Room temperature sensor (expandable to up to 4 room temperature sensors)
  - Safety relay
  - Electrical cabinet internally pre-wired, all components routed to terminals
- Additional room temperature sensors (max. 3)
- Combination sensor room air quality, temperature and humidity
- Signal for external extract air fan
- TV | TW Pro control box

4.4 HovalSupervisor cloud TopTronic® C

(Terms of use according to www.hoval.com/hsc are accepted when ordered.)

HovalSupervisor cloud TopTronic® C
Remote access, visualisation, historization, trends, evaluations and alarming for Hoval indoor climate systems with TopTronic® C control

- Project-specific system engineering
- Visualisation of the system statuses, error messages, actual and nominal values of the entire plant system
- Graphical display of the entire plant control system, in order to complete an analysis of sequences and subsequently to be able to perform an optimisation
- Integrated continuous line recorder for a period of 3 years
- Integrated alarm management
- Multi-user system: simultaneous access, 2 users included per plant
- Max. 300 data points historicized
- Max. 10 control zones

Consisting of:

- Project-specific engineering of the visualisation as described above
- Industrial router for connecting the TopTronic® C control system
  - Metal casing installed in the zone control panel
  - Without SIM card, free choice of phone network
  - Router configuration possible via web server
  - Network connections:
    2 x 10/100 Mbit Ethernet
    2 x SIM card slot
  - SMA connections:
    1 x WLAN
    2 x mobile data via integrated antenna
  - Power supply for industrial router installed in zone control panel

HovalSupervisor cloud TopTronic® C subscription
Subscription for use of the HovalSupervisor cloud for visualisation of a TopTronic® C system

- 1 year term (subscription billed once a year)
- Use of the HovalSupervisor cloud and storage of the data in the cloud
- Paid support during business hours (only for the software, not for the system)
- The respective valid conditions of use and the service level agreement (SLA) apply, which can be retrieved online.

Options for HovalSupervisor cloud

- Antenna to improve mobile data reception in conjunction with the HovalSupervisor cloud TopTronic® C
  - Antenna with mounting bracket for on-site installation outside the TopTronic® C zone control panel
  - 2G/3G/4G-LTE/5G-ready
  - SMA port available on the antenna
- Antenna extension cable for connecting the antenna in conjunction with the HovalSupervisor cloud
  - SMA port
  - Double shielded
  - Length: 5 m

Hoval

1 Type code 110
2 Outlet nozzle 114
3 Suspension set 114
4 Air filtration 114
5 Paint finish 115
6 Recirculation silencer 115
7 Hydraulic assembly diverting system 116
8 Mixing valve 118
9 Condensate pump 118
10 Return temperature sensor 118
11 Pump control 119

Options

H

1 Type code

1.1 Type code for recirculation units

THC - 9 B C / ST . D1 / S . FK . LH . U- / Y . KP / TC . - . PP . RF

Availability

TH	TC	THC		
			Unit type	
			TH	Recirculation unit with heating section
			TC	Recirculation unit with heating/cooling section
			THC	Recirculation unit with heating and cooling section
			Unit size	
●	●	●	6	Size 6
●	●	●	9	Size 9
			Heating section	
	●		-	without heating section
●		●	A	with coil type A
●		●	B	with coil type B
●		●	C	with coil type C
			Heating/cooling section	
●			-	without heating/cooling section
	●	●	C	with coil type C
	●	●	D	with coil type D
			Design	
●	●	●	ST	Standard
			Air outlet	
●	●	●	D1	Design with Air-Injector
●			DN	Outlet nozzle
			Installation	
●	●	●	-	without
●	●	●	S	Suspension set
			Filter box	
●	●	●	--	without
●	●	●	FK	Filter box
●	●	●	FF	Flat filter box
			Paint finish	
●	●	●	--	without
●	●	●	LH	Standard paint finish
●	●	●	LU	Paint finish as desired

THC - 9 B C / ST . D1 / S . FK . LH . U- / Y . KP / TC . - . PP . RF

Availability

TH	TC	THC		
			Silencer	
●	●	●	--	without
●	●	●	U-	Recirculation silencer
			Hydraulics	
●	●	●	-	without
●	●	●	Y	Hydraulic assembly diverting system
●	●	●	M	Mixing valve
			Condensate pump	
●	●	●	--	without
	●	●	KP	Condensate pump
			Control system	
●	●	●	TC	TopTronic® C
●	●		KK	Terminal box design
			Reserve	
			Pump control	
●	●	●	--	without
●		●	PH	Heating pump
	●	●	PK	Heating or cooling pump
		●	PP	Heating pump and cooling pump
			Return temperature sensor	
●	●	●	--	without
●	●		RF	Return temperature sensor

Table H1: Type code and availability of recirculation units

1.2 Type code for supply air units

MHC - 9 B C / ST . D1 / S . -- . LH . - / Y . KP / TC . PP . RF

Availability

Unit type

MH	MC	MHC		
			MH	Supply air unit with heating section
			MC	Supply air unit with heating/cooling section
			MHC	Supply air unit with heating and cooling section

Unit size

MH	MC	MHC		
●	●	●	6	Size 6
●	●	●	9	Size 9

Heating section

MH	MC	MHC		
	●		-	without heating section
●		●	A	with coil type A
●		●	B	with coil type B
●		●	C	with coil type C

Heating/cooling section

MH	MC	MHC		
●			-	without heating/cooling section
	●	●	C	with coil type C
	●	●	D	with coil type D

Design

MH	MC	MHC		
●	●	●	ST	Standard

Air outlet

MH	MC	MHC		
●	●	●	D1	Design with Air-Injector

Installation

MH	MC	MHC		
●	●	●	-	without
●	●	●	S	Suspension set

Reserve

Paint finish

MH	MC	MHC		
●	●	●	--	without
●	●	●	LH	Standard paint finish
●	●	●	LU	Paint finish as desired

Reserve

Hydraulics

MH	MC	MHC		
●	●	●	-	without
●	●	●	Y	Hydraulic assembly diverting system
●	●	●	M	Mixing valve

MHC - 9 B C / ST . D1 / S . -- . LH . - / Y . KP / TC . PP . RF

Availability MH	MC	MHC		
			Condensate pump	
●	●	●	--	without
	●	●	KP	Condensate pump
			Control system	
●	●	●	TC	TopTronic® C
			Pump control	
●	●	●	--	without
●		●	PH	Heating pump
	●	●	PK	Heating or cooling pump
		●	PP	Heating pump and cooling pump
			Return temperature sensor	
●	●	●	--	without
●	●	●	RF	Return temperature sensor

Table H2: Type code and availability of supply air units

2 Outlet nozzle

For low-cost recirculation heating the TopVent® TH unit is available with a simple outlet nozzle. The air discharge angle cannot be adjusted. Units with outlet nozzle are well-suited for applications with lower comfort requirements and for large mounting heights (e.g. in high-bay warehouses).
The outlet nozzle replaces the Air-Injector. The external dimensions of the unit remain the same. The weight is reduced:

- Size 6: –15 kg
- Size 9: –21 kg

3 Suspension set

A suspension set is available to make it easy to install the units on the ceiling. The set consists of 4 pairs of U-profiles made of magnesium zinc sheet and is height-adjustable up to 1300 mm.

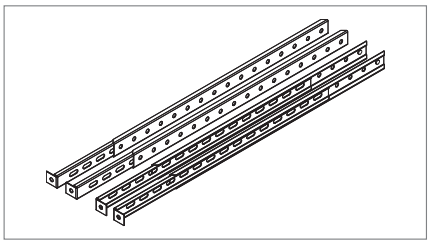

Fig. H1: Suspension set

4 Air filtration

For hygiene reasons, Hoval recommends always fitting TopVent® units with a filter.

4.1 Filter box

A filter box with 2 bag filters can be installed for the purpose of filtering the recirculation air. The modular construction made of magnesium zinc sheet with 2 sliding doors makes it easy to replace the filters.

Notice
In the planning phase make sure there is enough space in front of the sliding doors so that the filters can be replaced with ease.

A differential pressure switch is installed for automatic monitoring of the filter. It shows when the filters have to be changed.

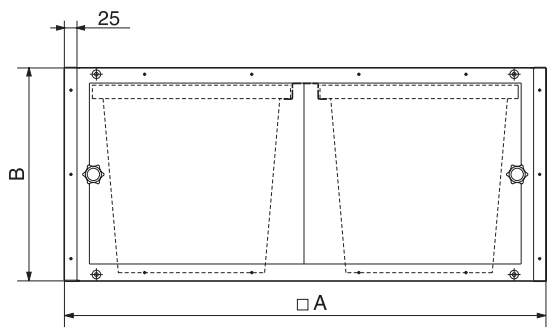

Size		6	9
A	mm	900	1100
B	mm	400	400
Filter class		ISO coarse 60 % (G4)	
Weight	kg	20	24
Factory setting of differential pressure switches	Pa	180	180

Table H3: Filter box technical data

4.2 Flat filter box

A flat filter box with 4 pleated cell filters can be installed for the purpose of filtering the recirculation air.
A differential pressure switch is installed for automatic monitoring of the filter. It shows when the filters have to be changed.

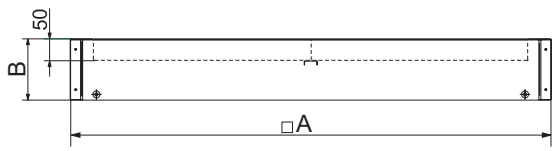

Size		6	9
A	mm	900	1100
B	mm	140	165
Filter class		ISO coarse 60 % (G4)	
Weight	kg	10.5	13.0
Factory setting of differential pressure switches	Pa	180	180

Table H4: Flat filter box technical data

5 Paint finish

If the customer wishes, the units can be provided with an exterior paint finish. There are 2 possibilities:
- Standard paint finish in Hoval red (RAL 3000)
- Paint finish in desired RAL colour

6 Recirculation silencer

The use of a recirculation silencer for noise reduction is recommended mainly if the TopVent® units are installed under flat, hard ceilings (e.g. made of concrete or sheet steel). The recirculation silencer is mounted on the appliance and thus reduces the sound reflection from the ceiling. Insertion attenuation is 3 dB compared with the total sound power level of each TopVent® unit.
Mount the recirculation units as usual via the 4 fastening points in the heating or heating/cooling section (for example, using the optional suspension set).

Caution
Risk of injury from falling parts. The silencer cannot bear the weight of the appliance. Do not locate any suspension points on the silencer.

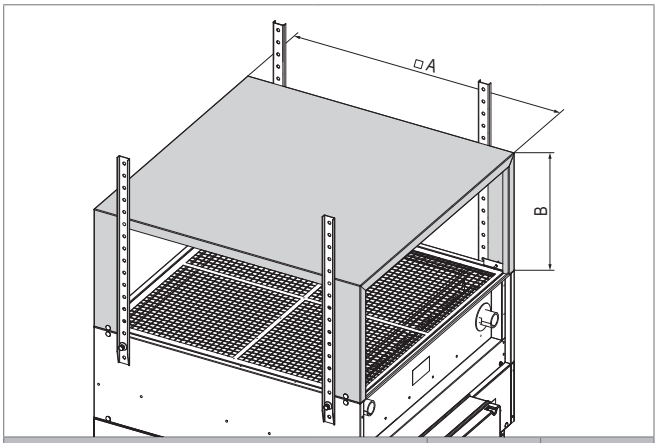

Size		6	9
A	mm	900	1100
B	mm	380	485
Weight	kg	15	20

Table H5: Recirculation silencer dimensions and weights

H

7 Hydraulic assembly diverting system

Assemblies for hydraulic diverting, which are optimally matched to the units, are available for easy installation of TopVent® units. Please note the following:

- Install the assembly horizontally.
- Mount the assembly so that its weight does not need to be absorbed by the coil.
- Insulate the assembly.

Default settings for the hydraulic alignment

Read off the default settings from the diagrams below. The curves 1.0 to 4.0 correspond to the revolutions of the valve spindles of the balancing valve; they are shown on the turning knob:

0.0 __ Valve closed

4.0 __ Valve fully open

The coil and the hydraulic assembly are already included in the specified pressure drops. Thus, only consider the pressure drops of the distributor circuit up to the screw connections.

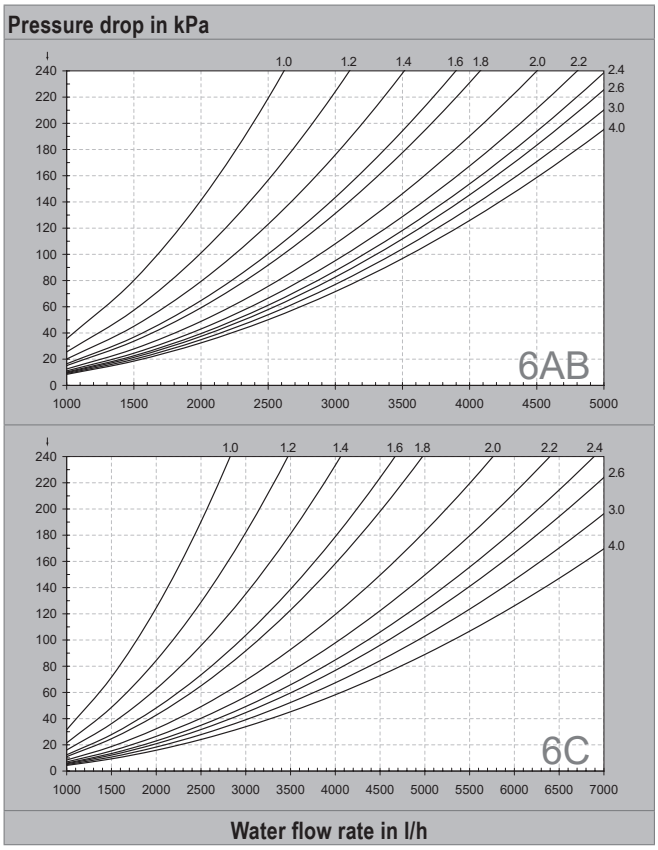

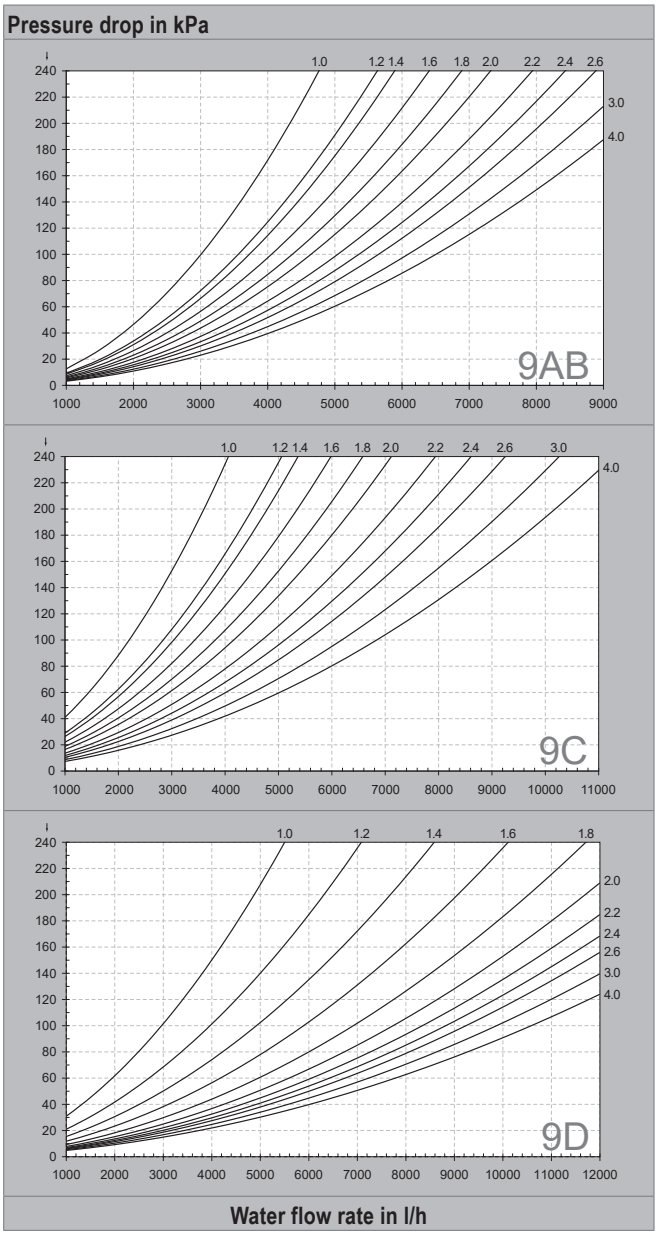

Fig. H2: Default settings for the balancing valves

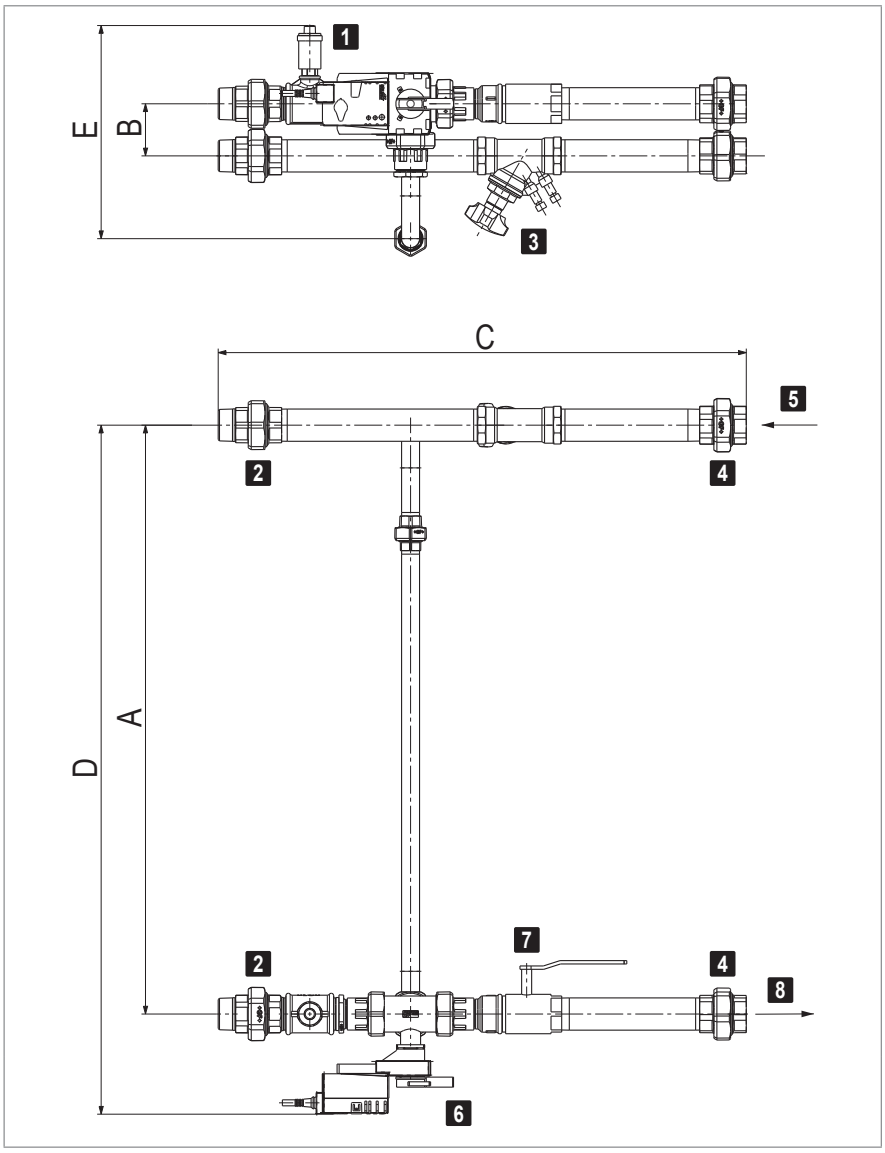

1	Automatic air vent
2	Coil screw joint
3	Control valve
4	Distributor circuit screw joint
5	Flow
6	Mixing valve
7	Ball valve
8	Return

Fig. H3:
Hydraulic assembly dimensional drawing

Type	A	B	C	D	E	Screw joint	Weight
Y-6AB	758	78	726	904	315	1¼ "	11
Y-6C	758	78	745	904	315	1¼ "	11
Y-9AB	882	78	770	1028	319	1½ "	13
Y-9C	882	78	791	1032	319	1½ "	14
Y-9D	882	95	840	1032	326	2 "	19

Table H6: Hydraulic assembly dimensions and weights (in mm resp. kg)

Type	Mixing valve	Control valve
Y-6AB	DN20 / kvs 6.3	STAD DN32
Y-6C	DN25 / kvs 10	STAD DN32
Y-9AB	DN25 / kvs 10	STAD DN40
Y-9C	DN32 / kvs 10	STAD DN40
Y-9D	DN40 / kvs 16	STAD DN50

Table H7: Valves of the hydraulic assembly

Mixing valves electrical data	
Nominal voltage	24 VAC/DC
Nominal voltage frequency	50/60 Hz
Power consumption for wire sizing	23 VA
Control signal Y	0-10 VDC
Operating range Y	2-10 VDC
Position response U	2-10 VDC
Actuator run time	9 s / 90°

Table H8: Mixing valves electrical data

8 Mixing valve

Mixing valves, which are optimally matched to the units, are available for easy installation of TopVent® units. They comply with the following specification:

- 3-way mixing valve with modulating rotary actuator (run time 9 s)
- Flow characteristic:
  - Equal percentage control path
  - Linear bypass
- Integrated position control and response

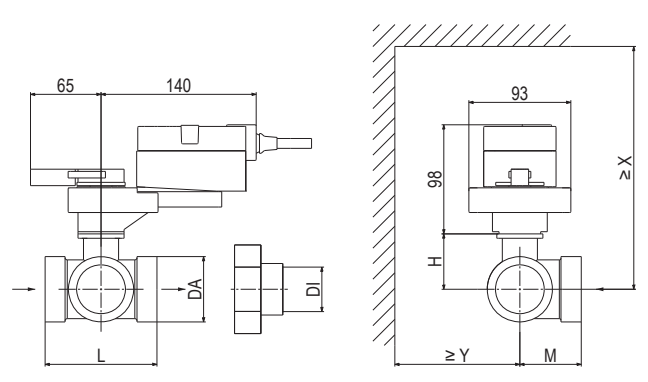

Type	DN	kvs	DA	DI	L	H	M	X	Y
		m³/h	"	"	mm	mm	mm	mm	mm
M-6AB	20	6.3	G 1¼	Rp ¾	86	46	42	220	90
M-6C	25	10	G 1½	Rp 1	85	46	45	220	90
M-9AB	25	10	G 1½	Rp 1	85	46	45	220	90
M-9C	32	10	G2	Rp 1¼	104	46	56	220	90
M-9D	40	16	G 2¼	Rp 1½	115	51	56	230	90

Table H9: Mixing valves dimensions

Type	Weight
M-6AB	2.6
M-6C	3.1
M-9AB	3.1
M-9C	4.0
M-9D	4.7

Table H10: Mixing valve weights (in kg)

Mixing valves electrical data	
Nominal voltage	24 VAC/DC
Nominal voltage frequency	50/60 Hz
Power consumption for wire sizing	23 VA
Control signal Y	0-10 V DC
Operating range Y	2-10 V DC
Position response U	2-10 V DC
Actuator run time	9 s / 90°

Table H11: NRQ24A-SR mixing valves electrical data

9 Condensate pump

TopVent® cooling units must be connected to a condensate drainage system. For applications in which connection to the waste water system is too expensive or not possible for structural reasons, a condensate pump can be provided. This is installed directly under the condensate drain connection; the supplied container is prepared for installation on the unit. It pumps the condensate through a flexible hose to a delivery head of 3 m, thus enabling discharge of the condensate

- through waste water pipes directly below the ceiling,
- onto the roof.

Flow rate (at 3 m delivery head)	l/h	max. 150
Tank capacity	l	max. 1.9
Dimensions (L x W x H)	mm	288 x 127 x 178
Weight	kg	2.4
Nominal voltage	VAC	230
Power consumption	kW	0.1
Current consumption	A	0.43

Table H12: Condensate pump technical data

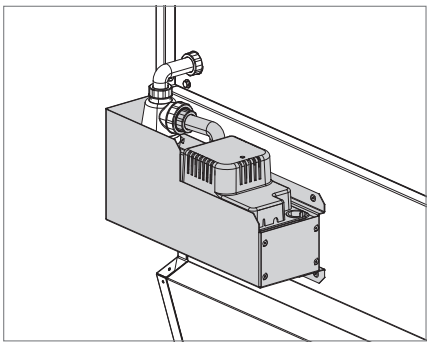

Fig. H4: Condensate pump

10 Return temperature sensor

The return temperature sensor monitors the return temperature of the heating medium.

11 Pump control

Instead of the diverting system, a mixing or injection circuit can also be installed in the load circuit.

Please note the following:
- Not only the mixing valves but also the pumps in the load circuit are controlled directly by the unit control box.
- Terminals for wiring the mixing valves and the pumps in the load circuit are located in the unit control box.
- Make sure that valves and pumps which meet the following requirements are provided on site.

Requirements for mixing valves
- Use 2-way control valves or 3-way mixing valves with the following flow characteristics:
  - Equal percentage control path
  - Linear bypass
- The valve authority must be ≥ 0.5.
- The maximum run time of the valve actuator is 45 s.
- The valve actuator must be continuous, i.e. the stroke changes in proportion to the control voltage (0-10 VDC or 2-10 VDC).
- The valve actuator must be designed with a position response (0-10 VDC or 2-10 VDC).
- The maximum power consumption is 23 VA.
- Install the valve close to the unit (max. distance 2 m).

Requirements for pumps
- Voltage .....230 VAC
- Total current .....max. 4.0 A for all pumps (heating pump, cooling pump, condensate pump)

Requirements for changeover valves
Use changeover valves conforming to the following specification for heating and cooling in the 2-pipe system:
- 3-way changeover valves
- Position response via limit switches (0°/90°)
- TopTronic® C System control
  - Supply voltage 24 V AC
  - 1-wire control (0/24 V AC)
  - Power consumption max. 44 VA
- TopTronic® C Single zone control panel
  - Supply voltage 24 V DC
  - 1-wire control (0/24 V DC)
  - Power consumption max. 13 VA

TopVent® TH / MH

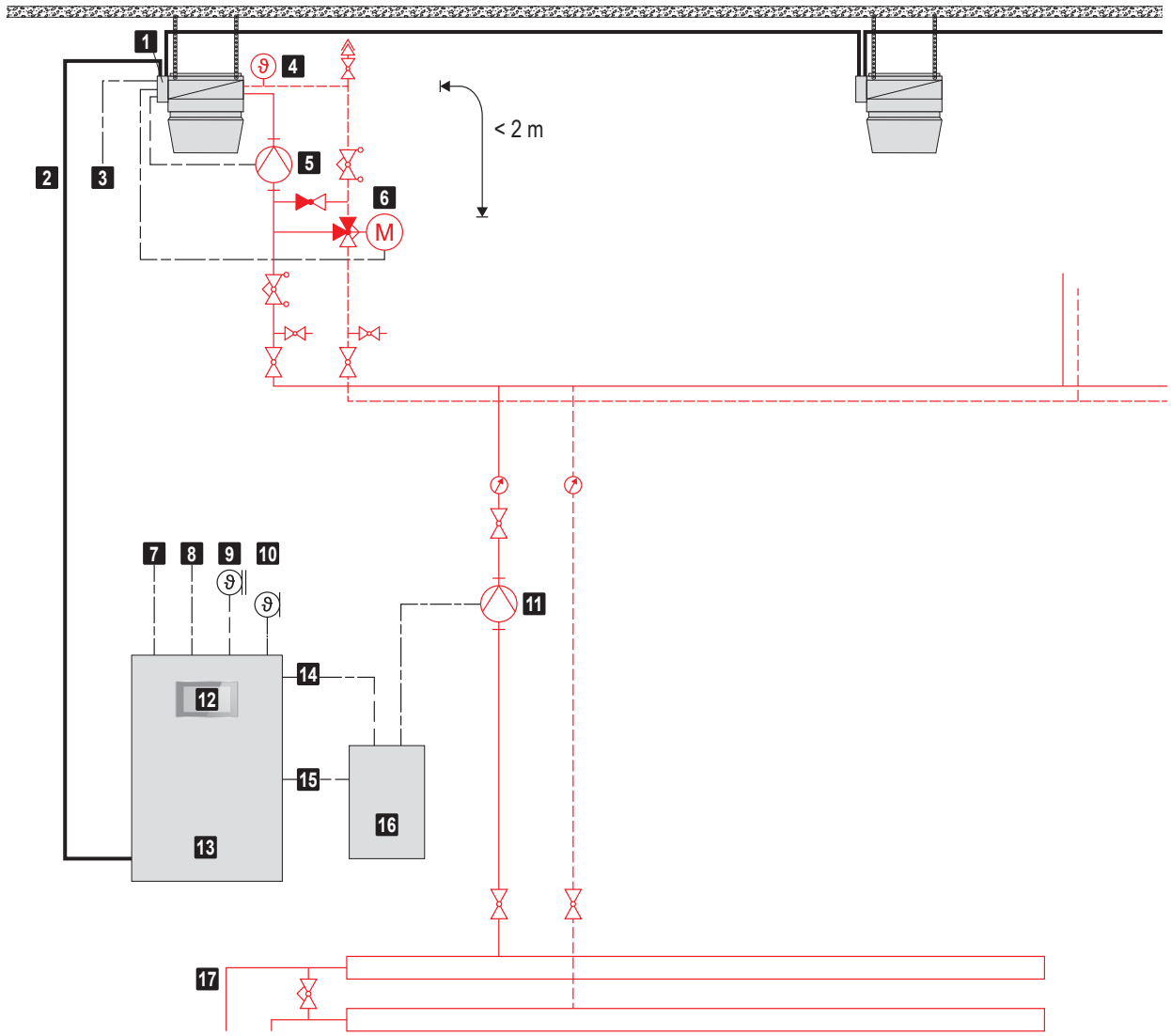

1	Unit control box	7	Power supply for control panel	13	Zone control panel
2	Zone bus	8	Collective alarm	14	Fault heat supply
3	Power supply TopVent®	9	Fresh air temperature sensor	15	Heating demand
4	Return temperature sensor (option)	10	Room temperature sensor	16	Heating control panel
5	Heating pump	11	Distributor pump	17	Heating circuit
6	Mixing valve	12	System operator terminal		

Fig. H5: Schematic diagram for injection circuit TopVent® TH / MH

TopVent® TC / MC

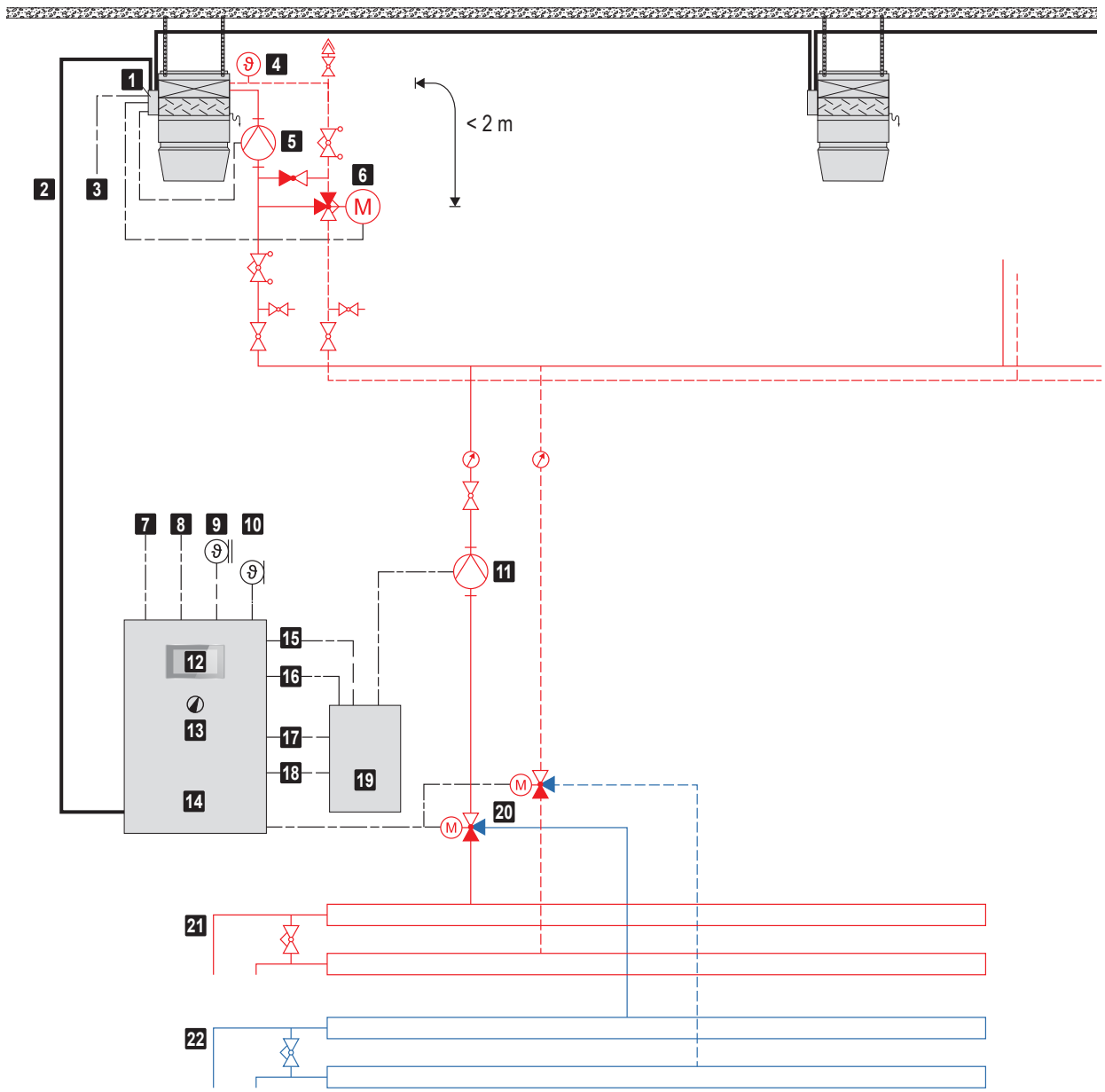

1	Unit control box	9	Fresh air temperature sensor	17	Heating demand
2	Zone bus	10	Room temperature sensor	18	Cooling demand
3	Power supply TopVent®	11	Distributor pump	19	Heating control panel
4	Return temperature sensor (option)	12	System operator terminal	20	Changeover valves heating/cooling
5	Heating/cooling pump	13	Cooling lock switch (option)	21	Heating circuit
6	Mixing valve	14	Zone control panel	22	Cooling circuit
7	Power supply for control panel	15	Fault heat supply		
8	Collective alarm	16	Fault cold supply		

Fig. H6: Schematic diagram for injection circuit TopVent® TC / MC

TopVent® THC / MHC

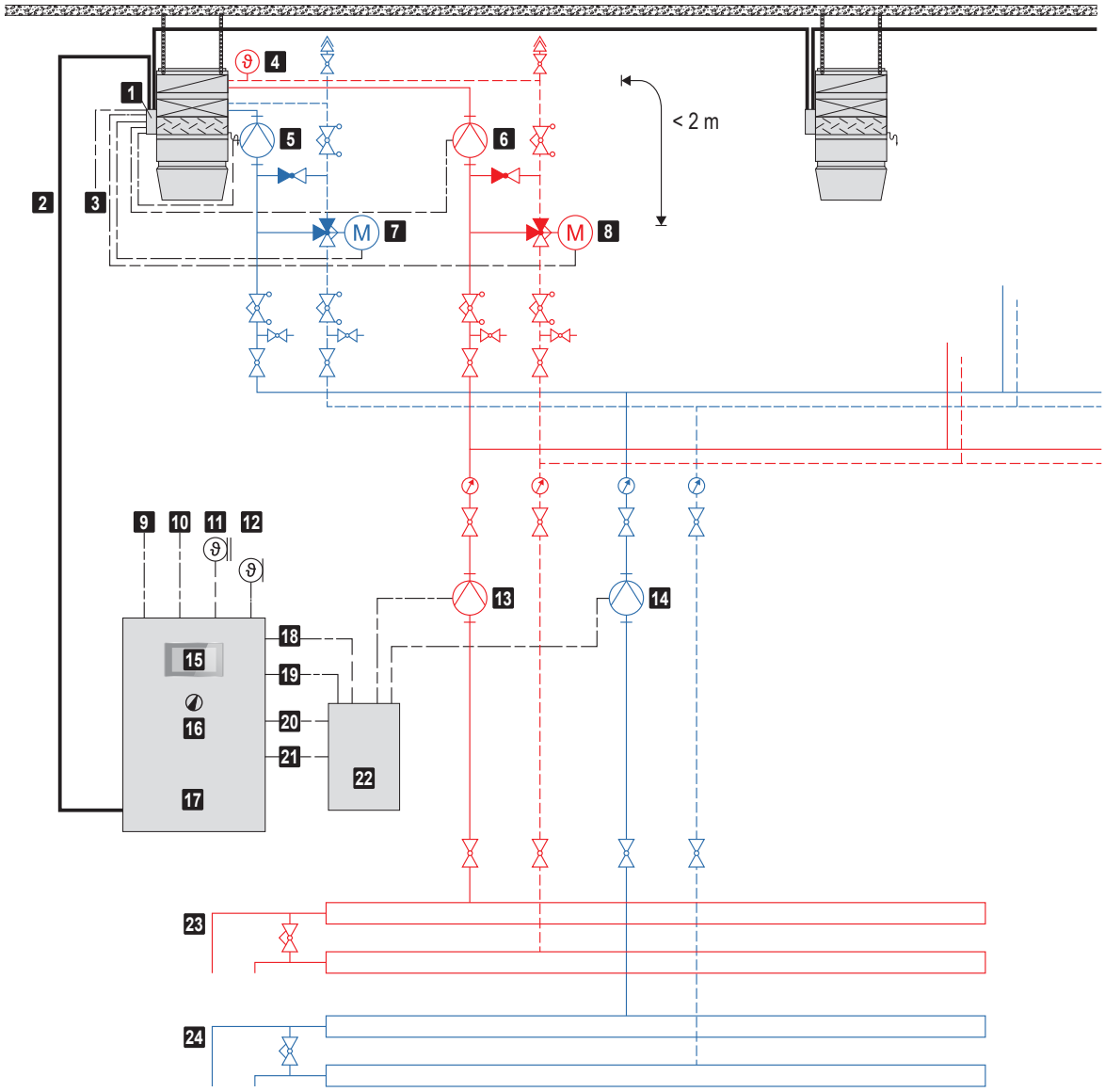

1	Unit control box	9	Power supply for control panel	17	Zone control panel
2	Zone bus	10	Collective alarm	18	Fault heat supply
3	Power supply TopVent®	11	Fresh air temperature sensor	19	Fault cold supply
4	Return temperature sensor (option)	12	Room temperature sensor	20	Heating demand
5	Cooling pump	13	Distributor pump heating	21	Cooling demand
6	Heating pump	14	Distributor pump cooling	22	Heating control panel
7	Mixing valve cooling	15	System operator terminal	23	Heating circuit
8	Mixing valve heating	16	Cooling lock switch (option)	24	Cooling circuit

Fig. H7: Schematic diagram for injection circuit TopVent® THC / MHC

Transport and installation

1 Installation 124
2 Hydraulic installation 126
3 Electrical installation 130

1 Installation

1.1 Preparation

The scope of delivery includes:
- TopVent® unit, delivered on a pallet
- Accessories (installation material, trap, temperature sensors)
- Optional components

TopVent® unit
- Make sure that a lifting platform is available.
- Only secure the unit to ceilings with sufficient load-bearing capacity.
- For the purposes of installation the unit is provided with 4 M10 rivet nuts with hexagon bolts and washers.
  - Fasten the unit to the ceiling by means of the optional suspension set or by means of flat iron bars, perforated bars, angles, steel cables or similar.
  - Do not use eyebolts.

1.2 Positioning

- Comply with the minimum and maximum distances.
- Only secure the unit to ceilings with sufficient load-bearing capacity.
- All air inlet and air outlet openings must be freely accessible. The supply air jet must be free to spread out unhindered.
- The access panels in the unit must be freely accessible.
- Clearance of at least 0.9 m is required for maintenance work around the heating/cooling section.
- Make sure that supply air units draw in fresh air via the fresh air duct:
  - Intake opening at approx. 1.5 m height above the roof
  - Not impaired by exhaust air openings, flues or the like

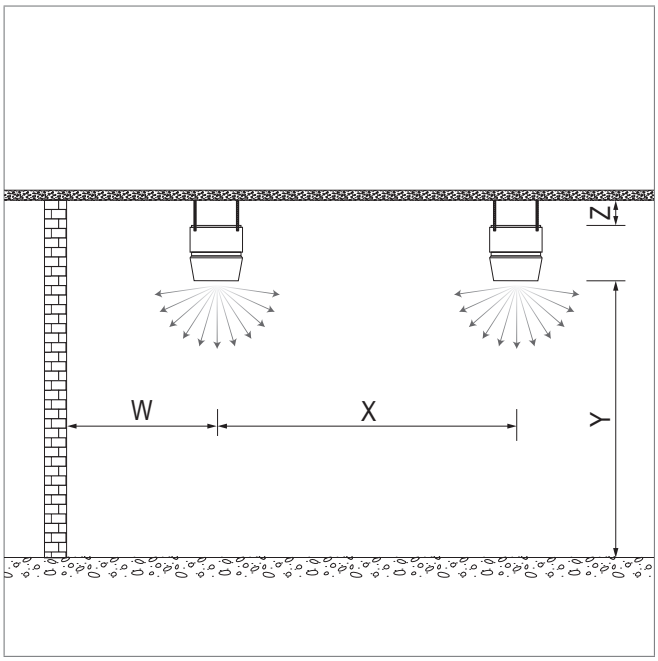

Unit type			TH, TC, THC		MH, MC, MHC	
Unit size			**6**	**9**	**6**	**9**
Distance from ceiling Z	min.	m	0.3	0.4	0.3	0.4
Mounting height Y	max. 1)	m	Approx. 9-25			
	min.	m	4	5	4	5
Applications with higher comfort requirements						
■ Distance from wall W	max.	m	12	15	12	15
	min.	m	6	7	6	7
■ Unit clearance X	max.	m	23	31	23	31
	min.	m	12	14	12	14
Applications with low comfort requirements						
■ Distance from wall W	max.	m	15	20	–	–
	min.	m	6	7	–	–
■ Unit clearance X	max.	m	30	41	–	–
	min.	m	12	14	–	–

1) The maximum mounting height varies depending on the boundary conditions (for values, see table of heat outputs or calculation with the "HK-Select" selection program)

Table I1: Minimum and maximum distances

1.3 Unit installation

Proceed as follows to position the unit:
- Transport the unit to the installation site and rotate it to the correct position.
- Fasten the unit to the designated suspension points.
- Connect supply air units to a fresh air duct via a canvas connection and connect both flanges with an earth wire.

2 Hydraulic installation

2.1 Heating/cooling coil

The TopTronic® C control system is designed for a distributor circuit with separate hydraulic connection of the units; i.e. a mixing valve is installed in front of each unit. The diverting circuit is used as standard.

Requirements on the boiler system and the distributor circuit

- Hydraulically balance the pipework for the individual units within a control zone to ensure even distribution.
- The heating medium must be available at the mixing valve without delay in the required amount and temperature.
- The condensate separator in cooling units only functions while the fan is running. No coolant must be allowed to circulate in the coil when the unit is switched off.
- Depending on local conditions, check whether compensators for linear expansion are required for the supply and return lines and/or articulated connections are required for the units.
- Do not fasten any loads to the coil, e.g. by means of the flow or return lines.
- Insulate the hydraulic lines.

The TopTronic® C control system switches on the heating/cooling pumps and the heating/cooling demand every day. This prevents the pumps from blocking in case of a long shutdown.

Requirements for mixing valves

- Use 2-way control valves or 3-way mixing valves with the following flow characteristics:
  - Equal percentage control path
  - Linear bypass
- The valve authority must be ≥ 0.5.
- The maximum run time of the valve actuator is 45 s.
- The valve actuator must be continuous, i.e. the stroke changes in proportion to the control voltage (0-10 VDC or 2-10 VDC).
- The valve actuator must be designed with a position response (0-10 VDC or 2-10 VDC).
- The maximum power consumption is 23 VA.
- Install the valve close to the unit (max. distance 2 m).

Notice
Use the “Hydraulic assembly” or “Mixing valve” options for quick and easy hydraulic installation.

Requirements for changeover valves

Use changeover valves conforming to the following specification for heating and cooling in the 2-pipe system:

- 3-way changeover valves
- Position response via limit switches (0°/90°)
- TopTronic® C System control
  - Supply voltage 24 V AC
  - 1-wire control (0/24 V AC)
  - Power consumption max. 44 VA
- TopTronic® C Single zone control panel
  - Supply voltage 24 V DC
  - 1-wire control (0/24 V DC)
  - Power consumption max. 13 VA

2.2 Condensate connection

Condensate arising in cooling units must be removed via a condensate-proof line.

- Install and insulate the supplied trap on the condensate connection of the unit.
- Dimension the slope and cross-section of the condensate line so that no condensate backflow takes place.
- Make sure that the condensate produced is drained in compliance with local regulations.
- Route the condensate line from the pump directly upwards.

Notice
Use the “Condensate pump” option for quick and easy hydraulic installation.

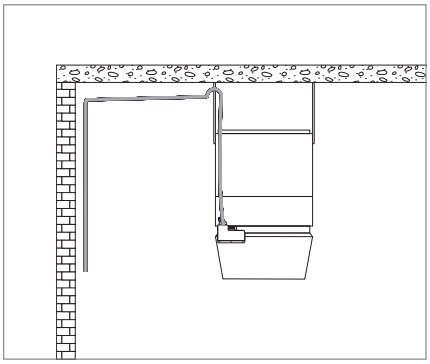

Fig. I1: Condensate drain

TopVent® TH / MH

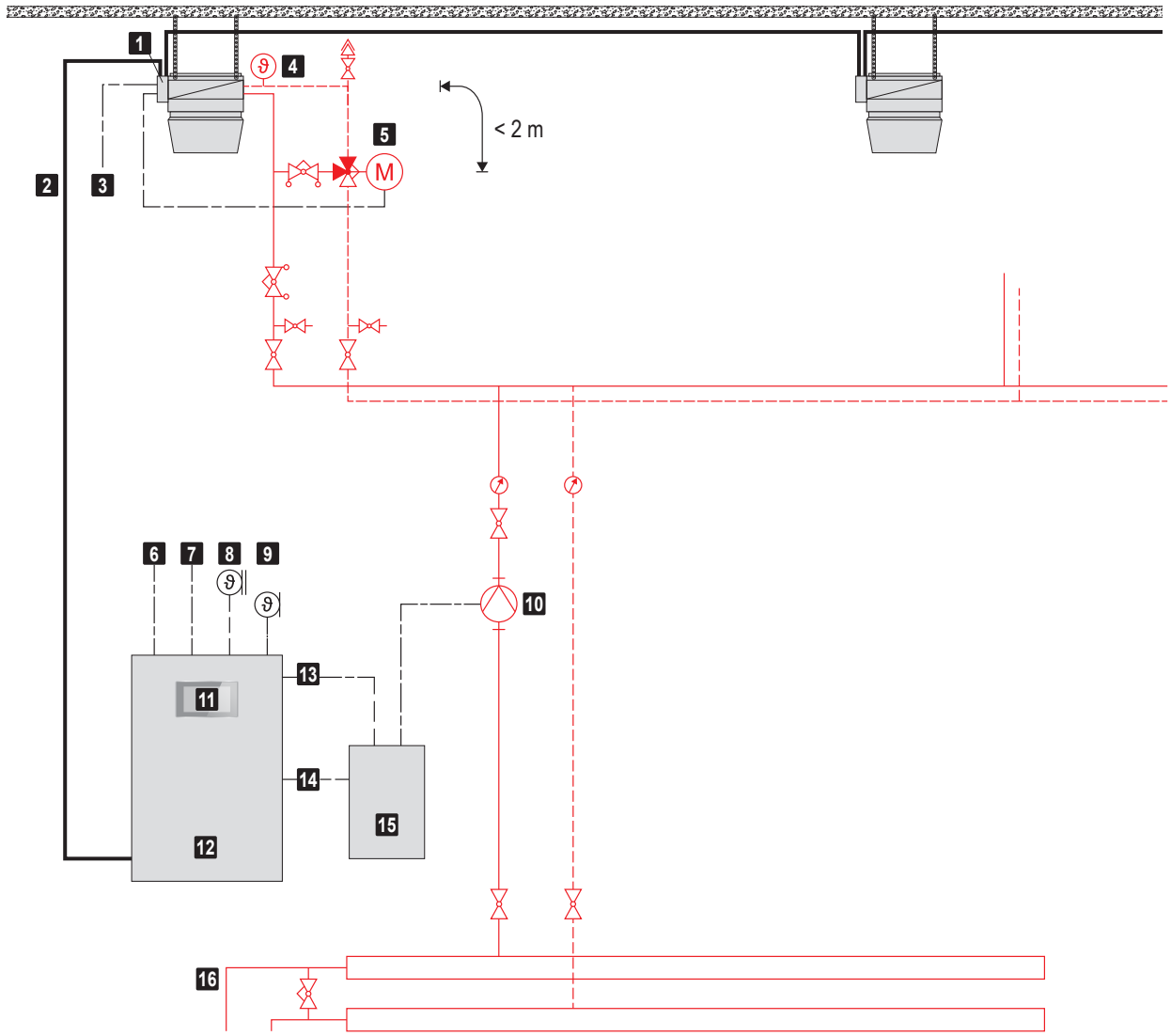

1	Unit control box	7	Collective alarm	13	Fault heat supply
2	Zone bus	8	Fresh air temperature sensor	14	Heating demand
3	Power supply TopVent®	9	Room temperature sensor	15	Heating control panel
4	Return temperature sensor (option)	10	Distributor pump	16	Heating circuit
5	Mixing valve	11	System operator terminal		
6	Power supply for control panel	12	Zone control panel		

Fig. I2: Schematic diagram for hydraulic diverting circuit TopVent® TH / MH

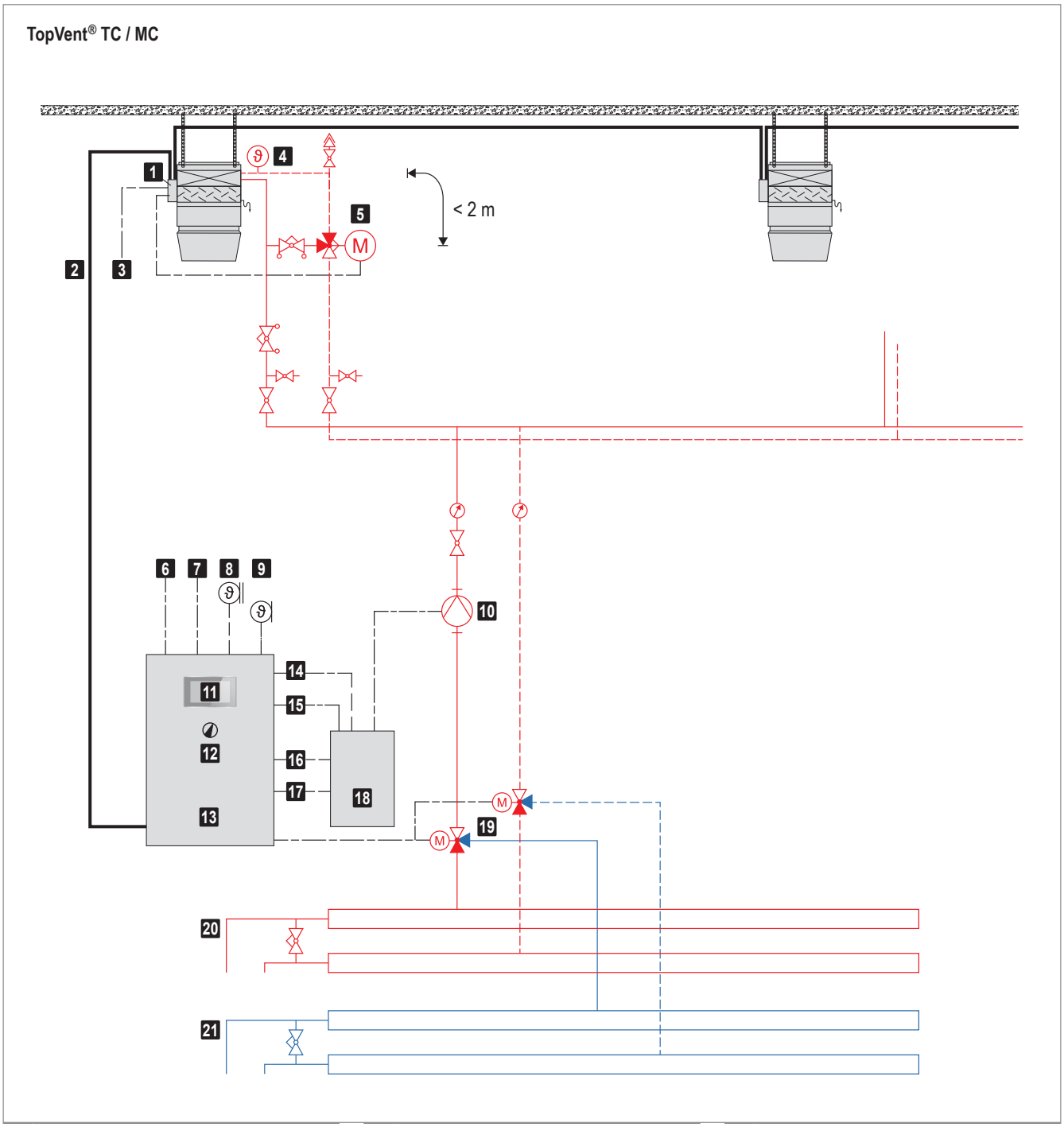

1	Unit control box	8	Fresh air temperature sensor	15	Fault cold supply
2	Zone bus	9	Room temperature sensor	16	Heating demand
3	Power supply TopVent®	10	Distributor pump	17	Cooling demand
4	Return temperature sensor (option)	11	System operator terminal	18	Heating control panel
5	Mixing valve	12	Cooling lock switch (option)	19	Changeover valves heating/cooling
6	Power supply for control panel	13	Zone control panel	20	Heating circuit
7	Collective alarm	14	Fault heat supply	21	Cooling circuit

Fig. I3: Schematic diagram for hydraulic diverting circuit TopVent® TC / MC

TopVent® THC / MHC

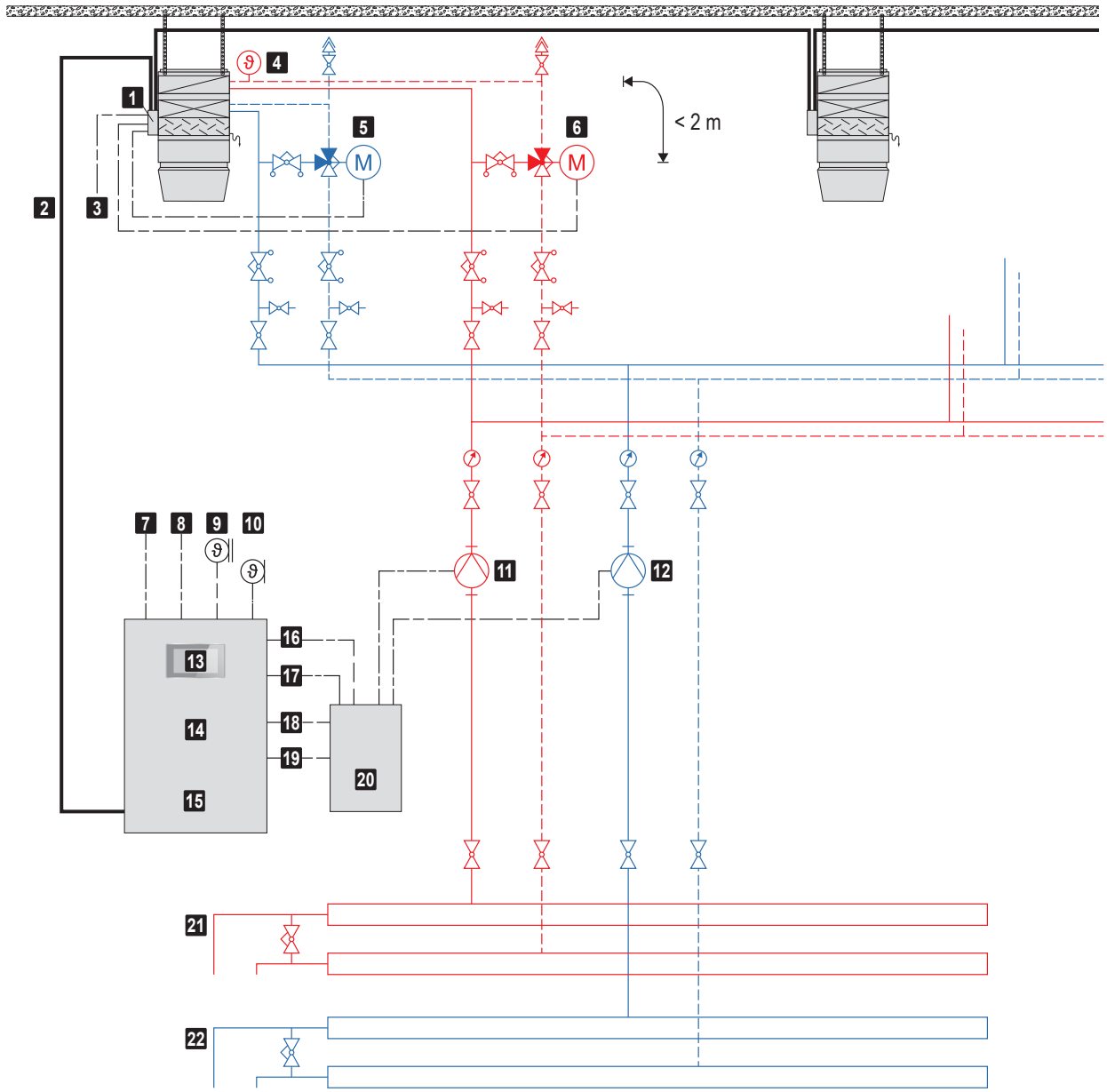

1	Unit control box	9	Fresh air temperature sensor	17	Fault cold supply
2	Zone bus	10	Room temperature sensor	18	Heating demand
3	Power supply TopVent®	11	Distributor pump heating	19	Cooling demand
4	Return temperature sensor (option)	12	Distributor pump cooling	20	Heating control panel
5	Mixing valve cooling	13	System operator terminal	21	Heating circuit
6	Mixing valve heating	14	Cooling lock switch (option)	22	Cooling circuit
7	Power supply for control panel	15	Zone control panel		
8	Collective alarm	16	Fault heat supply		

Fig. I4: Schematic diagram for hydraulic diverting circuit TopVent® THC / MHC

3 Electrical installation

The electrical installation must only be carried out by a qualified electrician.

- Observe the relevant regulations (e.g. EN 60204-1).
- Choose the dimensions of the cable cross sections in line with the applicable regulations.
- Route signal and bus lines separately from mains cables.
- Make sure the lightning protection system for the units or for the entire building is planned and carried out by professionals.
- Provide overload protection equipment on site in the mains connection line of the zone control panel.
- Carry out the electrical installation according to the wiring diagram:
  - Power supply TopVent®
  - Zone bus based on system layout
  - Signal lines
- Connect optional components to the unit control box (condensate pump, return temperature sensor, mixing valve, pump).

3.1 Cable list for on-site connections – TopTronic® C System control

Component	Designation	Voltage	Cable		Comments	Start	Target
Zone control panel	Power supply	3 × 400 V AC	NYM-J	5 × … mm²		On-site	Zone control panel
		1 × 230 V AC	NYM-J	3 × … mm²		On-site	Zone control panel
	Zone bus		J-Y(ST)Y	2 × 2 × 0.8 mm	max. 500 m	Zone control panel	Hoval units
	System bus		Ethernet	≥ CAT 5	For connecting several zone control panels | max. 100 m	Zone control panel	Further zone control panel
	Integration into the building management system		Ethernet	≥ CAT 5	BACnet, Modbus IP | max. 100 m	Zone control panel	On-site (BMS)
			J-Y(ST)Y	2 × 2 × 0.8 mm	Modbus RTU | max. 1200 m	Zone control panel	On-site (BMS)
	HovalSupervisor cloud (wired)		Ethernet	≥ CAT 5	max. 100 m	Zone control panel	On-site
	Room temperature sensor		J-Y(ST)Y	2 × 2 × 0.8 mm	max. 100 m	Zone control panel	Sensor
	Additional room temperature sensors		J-Y(ST)Y	2 × 2 × 0.8 mm	max. 100 m	Zone control panel	Sensor
	Combination sensor room air quality, temperature and humidity		J-Y(ST)Y	4 × 2 × 0.8 mm	max. 250 m	Zone control panel	Sensor
	Fresh air temperature sensor		J-Y(ST)Y	2 × 2 × 0.8 mm	max. 100 m	Zone control panel	Sensor
	Combination sensor fresh air temperature and humidity		J-Y(ST)Y	2 × 2 × 0.8 mm	max. 250 m	Zone control panel	Sensor
	Heating demand	Volt-free max. 250 V AC max. 24 V DC	NYM-O	2 × 1.5 mm²	max. 8 A	Zone control panel	On-site
	Setpoint heating demand	2-10 V DC	J-Y(ST)Y	2 × 2 × 0.8 mm	max. 100 m	Zone control panel	On-site
	Cooling demand	Volt-free max. 250 V AC max. 24 V DC	NYM-O	2 × 1.5 mm²	max. 8 A	Zone control panel	On-site
	Fault heat supply *)	24 V AC	J-Y(ST)Y	2 × 2 × 0.8 mm	max. 1 A | max. 100 m	On-site	Zone control panel
	Fault cold supply *)	24 V AC	J-Y(ST)Y	2 × 2 × 0.8 mm	max. 1 A | max. 100 m	On-site	Zone control panel
	Collective alarm	Volt-free max. 230 V AC max. 24 V DC	NYM-O	2 × 1.5 mm²	max. 3 A max. 2 A	Zone control panel	On-site
	Distributor pump heat supply	3 × 400 V AC	NYM-J	4 × 1.5 mm² (min.)	Power supply 3-phase, max. 6 A max. cable cross section 4 × 4 mm²	Zone control panel	Pump
		1 × 230 V AC	NYM-J	3 × 1.5 mm² (min.)	Power supply 1-phase, max. 6 A max. cable cross section 3 × 4 mm²		
			NYM-O	4 × 1.5 mm²	Control line | max. 100 m		
	Distributor pump cold supply	3 × 400 V AC	NYM-J	4 × 1.5 mm² (min.)	Power supply 3-phase, max. 6 A max. cable cross section 4 × 4 mm²	Zone control panel	Pump
		1 × 230 V AC	NYM-J	3 × 1.5 mm² (min.)	Power supply 1-phase, max. 6 A max. cable cross section 3 × 4 mm²		
			NYM-O	4 × 1.5 mm²	Control line | max. 100 m		

Component	Designation	Voltage	Cable		Comments	Start	Target
	Power supply for units	3 × 400 V AC	NYM-J	5 × 1.5 mm² (min.)	RoofVent® size 6 max. cable cross section 5 × 6 mm²	Zone control panel or on-site	Hoval units
		3 × 400 V AC	NYM-J	5 × 4.0 mm² (min.)	RoofVent® size 9 max. cable cross section 5 × 10 mm²		
		3 × 400 V AC	NYM-J	5 × 1.5 mm² (min.)	TopVent® max. cable cross section 5 × 6 mm²		
	System operator terminal (if external)	24 V DC	NYM-J	3 × 1.5 mm²	Power supply 0.42 A | max. 50 m max. cable cross section 3 × 4 mm²	Zone control panel	System operator terminal
			Ethernet	≥ CAT 5	Communication | max. 100 m	Zone control panel	System operator terminal
	Zone operator terminal (if external)	24 V AC	J-Y(ST)Y	4 × 2 × 0.8 mm	Power supply, 1 A fusing | max. 500 m	Zone control panel	Zone operator terminal
	External sensor values	0-10 V DC	J-Y(ST)Y	2 × 2 × 0.8 mm	max. 100 m	On-site	Zone control panel
	External set values	2-10 V DC	J-Y(ST)Y	2 × 2 × 0.8 mm	max. 100 m	On-site	Zone control panel
	Load shedding input *)	24 V AC	J-Y(ST)Y	2 × 2 × 0.8 mm	max. 1 A | max. 100 m	On-site	Zone control panel
	Operating selector switch on terminal (analogue)	0-10 V DC	J-Y(ST)Y	2 × 2 × 0.8 mm	max. 100 m	On-site (switch)	Zone control panel
	Operating selector switch on terminal (digital)	0-10 V DC	J-Y(ST)Y	6 × 2 × 0.8 mm	max. 100 m	On-site (switch)	Zone control panel
	Operating selector button on terminal	24 V AC	J-Y(ST)Y	6 × 2 × 0.8 mm	max. 0.5 A | max. 100 m	On-site (button)	Zone control panel
	Forced off *)	24 V AC	J-Y(ST)Y	2 × 2 × 0.8 mm	max. 1 A | max. 100 m	On-site	Zone control panel
	Heating/cooling changeover *)	24 V AC	J-Y(ST)Y	2 × 2 × 0.8 mm	Signal external enabling/setting max. 1 A | max. 100 m	On-site	Zone control panel
	Changeover valve flow	24 V AC	NYM-J	3 × 1.5 mm²	Power supply max. cable cross section 3 × 4 mm²	Zone control panel	Valve
		24 V AC	J-Y(ST)Y	2 × 2 × 0.8 mm	Control line | max. 100 m		
	Changeover valve return	24 V AC	NYM-J	3 × 1.5 mm²	Power supply max. cable cross section 3 × 4 mm²	Zone control panel	Valve
		24 V AC	J-Y(ST)Y	2 × 2 × 0.8 mm	Control line | max. 100 m		
TopVent® unit	Power supply	3 × 400 V AC	NYM-J	5 × 1.5 mm² (min.)	max. cable cross section 5 × 6 mm²	Zone control panel or on-site	TopVent® unit
	Zone bus		J-Y(ST)Y	2 × 2 × 0.8 mm	max. 500 m	Zone control panel	TopVent® unit
	Mixing valve heating	24 V DC	NYM-O	4 × 0.75 mm²	max. cable cross section 4 × 1.5 mm² with Hydraulic assembly or Mixing valve option: cable connected to the mixing valve	TopVent® unit	Valve
	Mixing valve cooling	24 V DC	NYM-O	4 × 0.75 mm²		TopVent® unit	Valve
	Heating pump	230 V AC	NYM-J	3 × 1.5 mm²	Power supply max. cable cross section 3 × 1.5 mm²	TopVent® unit	Pump
		24 V DC	J-Y(ST)Y	2 × 2 × 0.8 mm	Control line | max. 100 m		
	Cooling pump	230 V AC	NYM-J	3 × 1.5 mm²	Power supply max. cable cross section 3 × 1.5 mm²	TopVent® unit	Pump
		24 V DC	J-Y(ST)Y	2 × 2 × 0.8 mm	Control line | max. 100 m		
	Forced off	24 V DC	NYM-O	2 × 1.5 mm²	for TopVent® MH, MC, MHC, MP max. 100 m | max. 1 A	On-site	TopVent® unit
	Door contact	Volt-free	J-Y(ST)Y	1 × 2 × 0.8 mm	for TopVent® TH, TC, THC | max. 100 m	On-site	TopVent® unit

***) Use a relay to connect the signal to several zone controllers in parallel.**

Table I2: Cable list for on-site connections – TopTronic® C System control

3.2 Cable list for on-site connections – TopTronic® C Single zone control panel

Component	Designation	Voltage	Cable		Comments	Start	Target
Single zone control panel	Power supply	1 × 230 V AC	NYM-J	3 × 1.5 mm²	max. cable cross section 3 × 6 mm²	On-site	Zone control panel
	Zone bus		J-Y(ST)Y	2 × 2 × 0.8 mm	max. 500 m	Zone control panel	Hoval units
	System bus		Ethernet	≥ CAT 5	For connecting several zone control panels | max. 100 m	Zone control panel	Further zone control panel
	Integration into the building management system		Ethernet	≥ CAT 5	BACnet, Modbus IP | max. 100 m	Zone control panel	On-site (BMS)
			J-Y(ST)Y	2 × 2 × 0.8 mm	Modbus RTU | max. 1200 m	Zone control panel	On-site (BMS)
	HovalSupervisor cloud (wired)		Ethernet	≥ CAT 5	max. 100 m	Zone control panel	On-site
	Room temperature sensor		J-Y(ST)Y	2 × 2 × 0.8 mm	max. 100 m	Zone control panel	Sensor
	Additional room temperature sensors		J-Y(ST)Y	2 × 2 × 0.8 mm	max. 100 m	Zone control panel	Sensor
	Combination sensor room air quality, temperature and humidity		J-Y(ST)Y	4 × 2 × 0.8 mm	max. 250 m	Zone control panel	Sensor
	Fresh air temperature sensor		J-Y(ST)Y	2 × 2 × 0.8 mm	max. 100 m	Zone control panel	Sensor
	Heating demand	Volt-free max. 230 V AC	NYM-O	2 × 1.5 mm²	max. 13 A	Zone control panel	On-site
	Setpoint heating demand	2-10 V DC	J-Y(ST)Y	2 × 2 × 0.8 mm	max. 100 m	Zone control panel	On-site
	Cooling demand	Volt-free max. 230 V AC	NYM-O	2 × 1.5 mm²	max. 13 A	Zone control panel	On-site
	Fault heat supply	24 V DC	NYM-O	2 × 1.5 mm²	max. 0.5 A | max. 100 m	On-site	Zone control panel
	Fault cold supply	24 V DC	NYM-O	2 × 1.5 mm²	max. 0.5 A | max. 100 m	On-site	Zone control panel
	Collective alarm	Volt-free max. 230 V AC	NYM-O	2 × 1.5 mm²	max. 13 A	Zone control panel	On-site
	Operating selector switch on terminal (digital)	0-10 V DC	J-Y(ST)Y	6 × 2 × 0.8 mm	max. 100 m	On-site (switch)	Zone control panel
	Operating selector button on terminal	24 V DC	J-Y(ST)Y	6 × 2 × 0.8 mm	max. 0.5 A | max. 100 m	On-site (button)	Zone control panel
	Forced off	24 V DC	NYM-O	2 × 1.5 mm²	max. 0.5 A | max. 100 m	On-site	Zone control panel
	Heating/cooling changeover	24 V DC	NYM-O	2 × 1.5 mm²	Signal external enabling/setting max. 0.5 A | max. 100 m	On-site	Zone control panel
	Changeover valve flow	24 V DC	NYM-O	7 × 1.5 mm²	see valve specification | max. 100 m	Zone control panel	Valve
	Changeover valve return	24 V DC	NYM-O	7 × 1.5 mm²	see valve specification | max. 100 m	Zone control panel	Valve
	External setpoint fresh air ratio	2-10 V DC	J-Y(ST)Y	2 × 2 × 0.8 mm	max. 100 m	On-site	Zone control panel

Component	Designation	Voltage	Cable		Comments	Start	Target
TopVent® unit	Power supply	3 × 400 V AC	NYM-J	5 × 1.5 mm² (min.)	max. cable cross section 5 × 6 mm²	On-site	TopVent® unit
	Zone bus		J-Y(ST)Y	2 × 2 × 0.8 mm	max. 500 m	Zone control panel	TopVent® unit
	Mixing valve heating	24 V DC	NYM-O	4 × 0.75 mm²	max. cable cross section 4 × 1.5 mm²	TopVent® unit	Valve
	Mixing valve cooling	24 V DC	NYM-O	4 × 0.75 mm²	with Hydraulic assembly or Mixing valve option: cable connected to the mixing valve	TopVent® unit	Valve
	Heating pump	230 V AC	NYM-J	3 × 1.5 mm²	Power supply max. cable cross section 3 × 1.5 mm²	TopVent® unit	Pump
		24 V DC	J-Y(ST)Y	2 × 2 × 0.8 mm	Control line | max. 100 m		
	Cooling pump	230 V AC	NYM-J	3 × 1.5 mm²	Power supply max. cable cross section 3 × 1.5 mm²	TopVent® unit	Pump
		24 V DC	J-Y(ST)Y	2 × 2 × 0.8 mm	Control line | max. 100 m		
	Forced off	24 V DC	NYM-O	2 × 1.5 mm²	for TopVent® MH, MC, MHC, MP max. 100 m | max. 1 A	On-site	TopVent® unit
	Door contact	Volt-free	J-Y(ST)Y	1 × 2 × 0.8 mm	for TopVent® TH, TC, THC | max. 100 m	On-site	TopVent® unit

Table I3: Cable list for on-site connections – TopTronic® C Single zone control panel

3.3 Cable list for on-site connections – EasyTronic EC

Component	Designation	Voltage	Cable		Comments	Start	Target
EasyTronic EC	Power supply	1 × 230 V AC	NYM	2 × 1.5 mm² (min.)	max. cable cross section 2 × 1.5 mm²	On-site	Hoval controller
	Heating/cooling changeover	24 V AC	NYM-O	2 × 1.5 mm²	max. 1 A	On-site	Hoval controller
	Door contact	Volt-free	NYM	2 × 1.0 mm²		On-site	Hoval controller
	Integration into the building management system		J-Y(ST)Y	2 × 2 × 0.8 mm	Modbus RTU | max. 300 m	On-site (BMS)	Hoval controller
	External room temperature sensor		J-Y(ST)Y	2 × 2 × 0.8 mm	max. 30 m	Sensor	Hoval controller
	System bus		J-Y(ST)Y	4 × 2 × 0.8 mm	Fan, air distribution	Hoval controller	TopVent® unit
	Pump/valve control	Volt-free				Pump/valve	Relay (on-site)
		max. 230 V AC	NYM	… × 1.5 mm² (min.)	via on-site relay, max. 3 A		
		max. 24 V DC					
TopVent® unit	Power supply	3 × 400 V AC	NYM-J	5 × 1.5 mm² (min.)	max. 1 A max. cable cross section 5 × 6 mm²	On-site	TopVent® unit
	System bus		J-Y(ST)Y	4 × 2 × 0.8 mm	Fan, air distribution	Hoval controller	TopVent® unit
	Differential pressure switch air filter		NYM	2 × 1.0 mm²	Signal to an on-site lamp or controller	TopVent® unit	On-site
	Condensate pump	230 V AC	NYM-J	3 × 1.5 mm²	Power supply max. cable cross section 3 × 1.5 mm²	On-site	TopVent® unit
		Volt-free	J-Y(ST)Y	1 × 2 × 0.8 mm	Control line	TopVent® unit	On-site
		max. 250 V AC			max. 3 A		

Table I4: Cable list for on-site connections – EasyTronic EC

3.4 Cable list for on-site connections – Terminal box design

Actuator Air-Injector	
Control voltage	2-10 V DC
Setting range	2 - 6.44 V / 0° - 50°
Position response	2-10 V DC
Max. cable cross section	4 × 1.5 mm²
Fan	
Enable signal	digital
Control voltage	0-10 V DC
Max. cable cross section	5 × 1.5 mm²
Air filter (option)	
Signal differential pressure switch	digital

Table I5: Control signals for TopVent® units in terminal box design

System design

1 Design example 138
2 Maintenance schedule 140
3 Checklist for project discussions 141

1 Design example

Notice
Use the “HK-Select” program to design Hoval Indoor Climate Systems.
You can download it free of charge on the Internet.

1.1 Applications with higher comfort requirements (e.g. production halls, assembly halls, sports halls)

Design data		Example
■ Geometry of the room ■ Internal heat gains ■ People in the room ■ Heating and cooling with central energy supply (boiler and water chiller) ■ Improvement of air quality, fresh air supply for the people in the room (fresh air volume per person = 30 m³/h)		50 × 60 ×12 m 28 kW 20 people
Design conditions heating:	■ Fabric heat losses ■ Fresh air temperature ■ Room temperature ■ Extract air temperature ■ Temperature of the heating medium	350 kW −15 °C 18 °C 20 °C 60 °C / 40 °C
Design conditions cooling:	■ Transmission sensible gains ■ Fresh air conditions ■ Room air conditions ■ Extract air temperature ■ Temperature of the cooling medium	140 kW 32 °C / 40 %rh 26 °C / 40 %rh 28 °C 6 °C / 12 °C
Fresh air supply ■ Required fresh air volume in total: ■ Fresh air ratio of supply air units: max. 10 % of the nominal air flow rate *The fresh air ratio can be adjusted from 0-100 %. Where EU Regulation 1253/2014 applies, it must be restricted to max. 10 % in the design conditions.* ■ Calculate the required number of supply air units from the nominal air flow rate.		20 × 30 = 600 m³/h Size 6: max. 600 m³/h fresh air Size 9: max. 900 m³/h fresh air → **1 TopVent® MC unit**
Mounting height ■ Calculate the actual mounting height (= distance between the floor and the bottom edge of the units). Y = Hall height − distance from ceiling − unit height ■ Compare the actual mounting height with the minimum and maximum mounting height (see Table I1 on page 125 and HK-Select).		Supply air units: Size 6 → OK Size 9 → OK Recirculation units: Size 6 → OK Size 9 → OK

Required performance for covering fabric heat losses

- Required heat output for coverage of fabric heat losses in total:

  Q_{H_req} = Fabric heat losses − internal heat loads

  350 – 28 = 322 kW

- Required cooling capacity for coverage of transmission sensible gains in total:

  Q_{C_req} = Transmission sensible gains + internal heat loads

  140 + 28 = 168 kW

Required heat output of recirculation units

- Determine the required heat output of the recirculation units based on the output of the supply air unit.

  $Q_{H\_Recirculation} = Q_{H\_req} - Q_{H\_Supply\ air}$

  For the supply air unit, take into account only the share of capacity that is used for coverage of fabric heat losses (separately shown in HK-Select).

Type	$Q_{H\_Supply\ air}$	$Q_{H\_Recirculation}$
MC-6/C	40.5	322 − 40.5 = 281.5
MC-9/C	63.2	322 − 63.2 = 258.8
MC-9/D	79.3	322 − 79.3 = 242.7

(values in kW)

Required cooling capacity of recirculation units

- Determine the required cooling capacity of the recirculation units based on the capacity of the supply air unit.

  $Q_{C\_Recirculation} = Q_{C\_req} - Q_{C\_Supply\ air}$

  For the supply air unit, take into account only the share of capacity that is used for coverage of transmission sensible gains (separately shown in HK-Select).

Type	$Q_{C\_Supply\ air}$	$Q_{C\_Recirculation}$
MC-6/C	25.4	168 − 25.4 = 142.6
MC-9/C	39.2	168 − 39.2 = 128.8
MC-9/D	46.7	168 − 46.7 = 121.3

(values in kW)

Minimum number of recirculation units

- Determine the minimum number of recirculation units depending on the available supply air units.
  Take into account the following criteria:
  - Floor area covered
  - Heat output
  - Cooling capacity
  - Unit clearances

Supply air unit	Recirculation units	Required number of recirculation units				Minimum number of recirculation units
Type	Type	Floor area covered	Heat output	Cooling capacity	Unit clearances	
1 unit MC-6/C	TC-6/C	5	7	6	5	**7**
	TC-9/C	3	5	4	5	**5**
	TC-9/D	3	4	3	5	**5**
1 unit MC-9/C	TC-6/C	4	7	5	5	**7**
	TC-9/C	3	4	4	3	**4**
	TC-9/D	3	4	3	3	**4**
1 unit MC-9/D	TC-6/C	4	6	5	5	**6**
	TC-9/C	3	4	≈ 3 *(-1 kW)*	3	**4**
	TC-9/D	3	≈ 3 *(-2 kW)*	3	3	**3**

- Choose the final solution from the remaining possibilities, depending on the geometry of the hall and the costs.

1.2 Applications with low comfort requirements (e.g. warehouses, logistics centres)

Design data		Example
■ Geometry of the room ■ Heating with central energy supply (boiler)		181 × 105 × 12 m
Design conditions heating:	■ Fabric heat losses ■ Fresh air temperature ■ Room temperature ■ Extract air temperature ■ Temperature of the heating medium	892 kW −15 °C 15 °C 18 °C 60 °C / 40 °C
Mounting height ■ Calculate the actual mounting height (= distance between the floor and the bottom edge of the units). Y = Hall height − distance from ceiling − unit height ■ Compare the actual mounting height with the minimum and maximum mounting height (see Table I1 on page 125 and HK-Select).		Recirculation units: Size 6 → OK Size 9 → OK
Required number of recirculation units ■ Determine the required number of recirculation units based on the heat output. n = Fabric heat losses : heat output per unit ■ Choose the final solution from the remaining possibilities, depending on the geometry of the hall and the costs.		

Type	kW	Quantity
TH-6/A	892 : 18.8	48
TH-6/B	892 : 26.9	34
TH-6/C	892 : 45.0	20
TH-9/A	892 : 31.7	29
TH-9/B	892 : 40.6	22
TH-9/C	892 : 69.9	13

2 Maintenance schedule

Activity	Interval
Renew air filter	When the filter alarm is displayed, at least annually
Comprehensively checking function; cleaning and possibly repairing the TopVent® units	Annually by Hoval customer service

Table J1: Maintenance schedule

Project		Name	
Project No.		Function	
		Address	
		Tel.	
Date		E-mail	

Information about the hall

Application		Length	
Type		Width	
Insulation		Height	

Is the roof strong enough?	○ yes	○ no	
Are there window areas?	○ yes	○ no	Percentage?
Is there a crane?	○ yes	○ no	Height?
Is there enough space for installation and servicing?	○ yes	○ no	
Are there any voluminous installations or machines?	○ yes	○ no	
Are pollutants present?	○ yes	○ no	Which?
– If yes, are they heavier than air?	○ yes	○ no	
Is oil contained in the extract air?	○ yes	○ no	
Is dust present?	○ yes	○ no	Dust level?
Is there high humidity?	○ yes	○ no	How much?
Are local machine extractions required?	○ yes	○ no	
Are any conditions imposed by public authorities?	○ yes	○ no	Which?
Are sound level requirements to be fulfilled?	○ yes	○ no	Which?

Design data

Internal heat gains (machines, ...)		kW
Heating and cooling		
Unit size		
Control zones		

Design conditions heating

■ Standard outside temperature		°C
■ Room temperature		°C
■ Extract air temperature		°C
■ Fabric heat losses		kW

Design conditions cooling

■ Standard outside temperature		°C		
■ Room temperature and humidity		°C		%
■ Extract air temperature		°C		
■ Transmission sensible gains		kW		

Further information

Hoval quality.
You can count on us.

Hoval

Hoval is one of the leading international companies for heating and indoor climate solutions. Drawing on more than 80 years of experience and benefiting from a close-knit team culture, the Hoval Group delivers exciting solutions and develops technically superior products. This leadership role requires a sense of responsibility for energy and the environment, which is expressed in an intelligent combination of different heating technologies and customised indoor climate solutions.

Hoval also provides personal consultations and comprehensive customer service. With around 2500 employees in 15 companies around the world, Hoval sees itself not as a conglomerate, but as a large family that thinks and acts globally.
Hoval heating and indoor climate solutions are currently exported to more than 50 countries.

Liechtenstein
Hoval Aktiengesellschaft
9490 Vaduz
+423 399 24 00
hoval.com

United Kingdom
Hoval Ltd.
Newark Notts. NG 24 1JN
+44 1636 672 711
hoval.co.uk

Responsibility
for energy and environment

Your Hoval partner

Thermotrade

Thermotrade Kft.
H-2112 Veresegyház, Szadai u. 13.
+36 28 588 810
thermotrade@hoval.hu
www.thermotrade.hu

Edition 2026-06